Work Order ID 98255

Tuesday, March 12, 2013 1:05:37 PM

98255

Item ID: D4500-1

Revision ID:

Item Name: Bell Door Header, LH

Accept *N900040100*

Setup Start *NS1*

Stop *NS2*

Start Date: 3/12/2013 **Start Qty:** 5.00 *5*

Required Date: 3/29/2013 **Req'd Qty:** 5.00 *5*

Cust Item ID:

Customer:

Reference:

Approvals: **Process Plan:** MF **Date:** 13-3-12 **Tooling:** **Date:**

QC: **Date:** **SPC (Y/N):** **Date:**

Run Start *NR1*

Stop *NR2*

Sequence ID/ Work Center ID	Operation Description	Set Up/ Run Hours	Tool ID	Tool #	Plan Code	Accept Qty	Reject Qty	Reject Number	Insp. Stamp
Draw Nbr	**Revision Nbr**								
D4500	~~pel~~ Rev. D								
100		0.00							
100									
Bandsaw	**Memo**	0.00							
Jeaspa Bandsaw	CUT BLANK 25.00" LONG					JL 13-3-26	5		
110		0.00							
110									
Purchasing	**Memo**	0.00					CL 13/04/03	(5)	
Purchasing	ISSUE P/O: 19474 TO WEJAY C OF C IS REQUIRED								
115 → Rev + Inspect	Corts						SP 13-5-27		
120	QC6- Inspect dimensions to drawing	0.00							
120									
QC	**Memo**	0.00							
Quality Control									

DAS 21 28

BS 28

DQA: _____ Date: _____

NCR: Yes / No

WORK ORDER NON-CONFORMANCE / UPDATE

QA Closed: Date:

Work Order: _____

Part No. _____

NCR No. _____

DISPOSITION

- Rework ☐
- Scrap ☐
- Use-as-is ☐
- Work Order Update ☐

AGAINST DEPARTMENT/PROCESS

Skid-tube ☐	Crosstube ☐	Water Jet ☐	Engineering ☐
Machining ☐	Small Fab ☐	Prod. Eng. Coor. ☐	Quality ☐
Thermoforming ☐	Finishing ☐	Rec/Store/Packaging ☐	Other ☐
Large Fab ☐	Composite ☐	Supplier ☐	☐

Root Cause		Date	Step	Qty	Description of work order update or Non-conformance	Initial Chief Eng	Action Description	Sign & Date	Verification	QC Inspector
Doc/Data	☐									
Equip/Tooling	☐									
Operator	☐									
Material	☐									
Setup	☐									
Other	☐									
Process	☐									
Supplier	☐									
Training	☐									
Unapproved	☐									

FAULT CATEGORY

Landing Gear

- ☐ Bending
- ☐ Centre Not Concentric to O/S
- ☐ Cracks
- ☐ Crushed/Crimped
- ☐ Cuffs
- ☐ Heat Treat
- ☐ Inspection Strip in Tube
- ☐ Ripples in Bend
- ☐ Torque Waves in Extrusion
- ☐ Turning Sequence
- ☐ Wave/Twist in Tube

General

- ☐ Bend
- ☐ BOM/Route
- ☐ Broken/Damaged
- ☐ Burrs
- ☐ Contamination
- ☐ Countersink
- ☐ Cut Too Short
- ☐ Drill Holes
- ☐ Drawing
- ☐ Finish
- ☐ Folio
- ☐ Grain
- ☐ Hardware
- ☐ Inspection Incomplete
- ☐ Instructions Incomplete/Unclear
- ☐ Maintenance
- ☐ Mislabeled
- ☐ Misread
- ☐ Offset
- ☐ Out of Calibration
- ☐ Out of Sequence
- ☐ Outside Dimensions
- ☐ Ovalized
- ☐ Over/Under tolerance
- ☐ Part Incorrect
- ☐ Part Lost/Missing
- ☐ Part Moved
- ☐ Positioned Wrong
- ☐ Power Loss/Surge
- ☐ Pressure/Forced
- ☐ Temperature/Cure
- ☐ Weld
- ☐ Wrong Stock Pulled
- ☐ Other

_____

_____

_____

Work Order ID 98255

Tuesday, March 12, 2013 1:05:37 PM

98255

Item ID: D4500-1

Revision ID:

Item Name: Bell Door Header, LH

Accept *N900040100*

Setup Start *NS1*

Stop *NS2*

Start Date: 3/12/2013 **Start Qty:** 5.00 *5*

Required Date: 3/29/2013 **Req'd Qty:** 5.00 *5*

Reference:

Cust Item ID:

Customer:

Run Start *NR1*

Stop *NR2*

Approvals: **Process Plan:** **Date:** **Tooling:** **Date:**

QC: **Date:** **SPC (Y/N):** **Date:**

Sequence ID/ Work Center ID	Operation Description	Set Up/ Run Hours	Tool ID	Tool #	Plan Code	Accept Qty	Reject Qty	Reject Number	Insp. Stamp
130	Chemical Conversion Coat per QSI005 4.1	0.00							
130 HandFinish						5	ϕ		13-5-31
Hand Finishing	Memo	0.00							
140	QC7-Inspect Chemical Conversion Coat	0.00				5			
140 QC									
Quality Control	Memo	0.00							
150	Spray Painting per QSI005 4.2	0.00							
150 SprayPaint						5	ϕ	ϕ	13-5-31
Spray Painting	Memo	0.00							

PRIME TEMPO GREY

125452

DQA: _____ Date: _____

NCR: Yes / No

WORK ORDER NON-CONFORMANCE / UPDATE

QA Closed: Date:

Work Order: _____

Part No. _____

NCR No. _____

DISPOSITION

- Rework ☐
- Scrap ☐
- Use-as-is ☐
- Work Order Update ☐

AGAINST DEPARTMENT/PROCESS

Skid-tube ☐	Crosstube ☐	Water Jet ☐	Engineering ☐
Machining ☐	Small Fab ☐	Prod. Eng. Coor. ☐	Quality ☐
Thermoforming ☐	Finishing ☐	Rec/Store/Packaging ☐	Other ☐
Large Fab ☐	Composite ☐	Supplier ☐	☐

Root Cause		Date	Step	Qty	Description of work order update or Non-conformance	Initial Chief Eng	Action Description	Sign & Date	Verification	QC Inspector
Doc/Data	☐									
Equip/Tooling	☐									
Operator	☐									
Material	☐									
Setup	☐									
Other	☐									
Process	☐									
Supplier	☐									
Training	☐									
Unapproved	☐									

FAULT CATEGORY

Landing Gear

- ☐ Bending
- ☐ Centre Not Concentric to O/S
- ☐ Cracks
- ☐ Crushed/Crimped
- ☐ Cuffs
- ☐ Heat Treat
- ☐ Inspection Strip in Tube
- ☐ Ripples in Bend
- ☐ Torque Waves in Extrusion
- ☐ Turning Sequence
- ☐ Wave/Twist in Tube

General

- ☐ Bend
- ☐ BOM/Route
- ☐ Broken/Damaged
- ☐ Burrs
- ☐ Contamination
- ☐ Countersink
- ☐ Cut Too Short
- ☐ Drill Holes
- ☐ Drawing
- ☐ Finish
- ☐ Folio
- ☐ Grain
- ☐ Hardware
- ☐ Inspection Incomplete
- ☐ Instructions Incomplete/Unclear
- ☐ Maintenance
- ☐ Mislabeled
- ☐ Misread
- ☐ Offset
- ☐ Out of Calibration
- ☐ Out of Sequence
- ☐ Outside Dimensions
- ☐ Ovalized
- ☐ Over/Under tolerance
- ☐ Part Incorrect
- ☐ Part Lost/Missing
- ☐ Part Moved
- ☐ Positioned Wrong
- ☐ Power Loss/Surge
- ☐ Pressure/Forced
- ☐ Temperature/Cure
- ☐ Weld
- ☐ Wrong Stock Pulled
- ☐ Other _____

Work Order ID 98255

Tuesday, March 12, 2013 1:05:37 PM

98255

Item ID: D4500-1

Revision ID:

Item Name: Bell Door Header, LH

Accept *N900040100*

Setup Start *NS1*

Stop *NS2*

Start Date: 3/12/2013 **Start Qty:** 5.00 *5*

Required Date: 3/29/2013 **Req'd Qty:** 5.00 *5*

Reference:

Cust Item ID:

Customer:

Approvals: **Process Plan:** **Date:** **Tooling:** **Date:**

QC: **Date:** **SPC (Y/N):** **Date:**

Run Start *NR1*

Stop *NR2*

Sequence ID/ Work Center ID	Operation Description	Set Up/ Run Hours	Tool ID	Tool #	Plan Code	Accept Qty	Reject Qty	Reject Number	Insp. Stamp
160	QC14- Inspect Spray Paint	0.00							
160 QC Quality Control	Memo	0.00							
200	Identify as per dwg & Stock Location SCA	0.00							
200 Packaging Packaging	Memo	0.00				5x			
210	QC21- Final Inspection - Work Order Release	0.00							
210 QC Quality Control	Memo	0.00							

B/6/13

SP 13-6-2

13/6/4

13-04-3

DQA: _____ Date: _____

NCR: Yes / No

WORK ORDER NON-CONFORMANCE / UPDATE

QA Closed: Date:

Work Order: _____

Part No. _____

NCR No. _____

DISPOSITION

- Rework ☐
- Scrap ☐
- Use-as-is ☐
- Work Order Update ☐

AGAINST DEPARTMENT/PROCESS

Skid-tube ☐	Crosstube ☐	Water Jet ☐	Engineering ☐
Machining ☐	Small Fab ☐	Prod. Eng. Coor. ☐	Quality ☐
Thermoforming ☐	Finishing ☐	Rec/Store/Packaging ☐	Other ☐
Large Fab ☐	Composite ☐	Supplier ☐	☐

Root Cause		Date	Step	Qty	Description of work order update or Non-conformance	Initial Chief Eng	Action Description	Sign & Date	Verification	QC Inspector
Doc/Data	☐									
Equip/Tooling	☐									
Operator	☐									
Material	☐									
Setup	☐									
Other	☐									
Process	☐									
Supplier	☐									
Training	☐									
Unapproved	☐									

FAULT CATEGORY

Landing Gear

- ☐ Bending
- ☐ Centre Not Concentric to O/S
- ☐ Cracks
- ☐ Crushed/Crimped
- ☐ Cuffs
- ☐ Heat Treat
- ☐ Inspection Strip in Tube
- ☐ Ripples in Bend
- ☐ Torque Waves in Extrusion
- ☐ Turning Sequence
- ☐ Wave/Twist in Tube

General

- ☐ Bend
- ☐ BOM/Route
- ☐ Broken/Damaged
- ☐ Burrs
- ☐ Contamination
- ☐ Countersink
- ☐ Cut Too Short
- ☐ Drill Holes
- ☐ Drawing
- ☐ Finish
- ☐ Folio
- ☐ Grain
- ☐ Hardware
- ☐ Inspection Incomplete
- ☐ Instructions Incomplete/Unclear
- ☐ Maintenance
- ☐ Mislabeled
- ☐ Misread
- ☐ Offset
- ☐ Out of Calibration
- ☐ Out of Sequence
- ☐ Outside Dimensions
- ☐ Ovalized
- ☐ Over/Under tolerance
- ☐ Part Incorrect
- ☐ Part Lost/Missing
- ☐ Part Moved
- ☐ Positioned Wrong
- ☐ Power Loss/Surge
- ☐ Pressure/Forced
- ☐ Temperature/Cure
- ☐ Weld
- ☐ Wrong Stock Pulled
- ☐ Other _____

Picklist Print

Tuesday, March 12, 2013 1:05:36 PM

Work Order ID: 98255

Parent Item: D4500-1

Parent Item Name: Bell Door Header, LH

Start Date: 3/12/2013 **Required Date:** 3/29/2013

Start Qty: 5.00 **Required Qty:** 5.00

Comments: IPP revA 12.07.18 new issue EC verified by:DD

Component Item ID/ Item Name	Replacement Item ID	Mfg/ Purch	Bin Item	Primary Location	Last Location	Route Seq ID	Unit of Measure	Qty on Hand	Qty per Kit	Total Qty	Qty Issued	Date Issued	Status
D4500-1P Bell Door Header		Purchased	No				Each	0.0000		**5**			
M6061T6B2.000X08.000 6061-T6 BAR 2.00' X 8.00"		Purchased	No			100	f	12.0850	**2.01**	**10.578947**	JL 13-3-26		

Location	Loc Qty	Loc Code
MAT005	12.085	
123089	0.085	
124443	12	

125034

10.6

DQA: _____ Date: _____

NCR: Yes / No

WORK ORDER NON-CONFORMANCE / UPDATE

QA Closed: Date:

Work Order: _____

Part No. _____

NCR No. _____

DISPOSITION

- Rework ☐
- Scrap ☐
- Use-as-is ☐
- Work Order Update ☐

AGAINST DEPARTMENT/PROCESS

Skid-tube ☐	Crosstube ☐	Water Jet ☐	Engineering ☐
Machining ☐	Small Fab ☐	Prod. Eng. Coor. ☐	Quality ☐
Thermoforming ☐	Finishing ☐	Rec/Store/Packaging ☐	Other ☐
Large Fab ☐	Composite ☐	Supplier ☐	☐

Root Cause		Date	Step	Qty	Description of work order update or Non-conformance	Initial Chief Eng	Action Description	Sign & Date	Verification	QC Inspector
Doc/Data	☐									
Equip/Tooling	☐									
Operator	☐									
Material	☐									
Setup	☐									
Other	☐									
Process	☐									
Supplier	☐									
Training	☐									
Unapproved	☐									

FAULT CATEGORY

Landing Gear

- ☐ Bending
- ☐ Centre Not Concentric to O/S
- ☐ Cracks
- ☐ Crushed/Crimped
- ☐ Cuffs
- ☐ Heat Treat
- ☐ Inspection Strip in Tube
- ☐ Ripples in Bend
- ☐ Torque Waves in Extrusion
- ☐ Turning Sequence
- ☐ Wave/Twist in Tube

General

- ☐ Bend
- ☐ BOM/Route
- ☐ Broken/Damaged
- ☐ Burrs
- ☐ Contamination
- ☐ Countersink
- ☐ Cut Too Short
- ☐ Drill Holes
- ☐ Drawing
- ☐ Finish
- ☐ Folio
- ☐ Grain
- ☐ Hardware
- ☐ Inspection Incomplete
- ☐ Instructions Incomplete/Unclear
- ☐ Maintenance
- ☐ Mislabeled
- ☐ Misread
- ☐ Offset
- ☐ Out of Calibration
- ☐ Out of Sequence
- ☐ Outside Dimensions
- ☐ Ovalized
- ☐ Over/Under tolerance
- ☐ Part Incorrect
- ☐ Part Lost/Missing
- ☐ Part Moved
- ☐ Positioned Wrong
- ☐ Power Loss/Surge
- ☐ Pressure/Forced
- ☐ Temperature/Cure
- ☐ Weld
- ☐ Wrong Stock Pulled
- ☐ Other _____

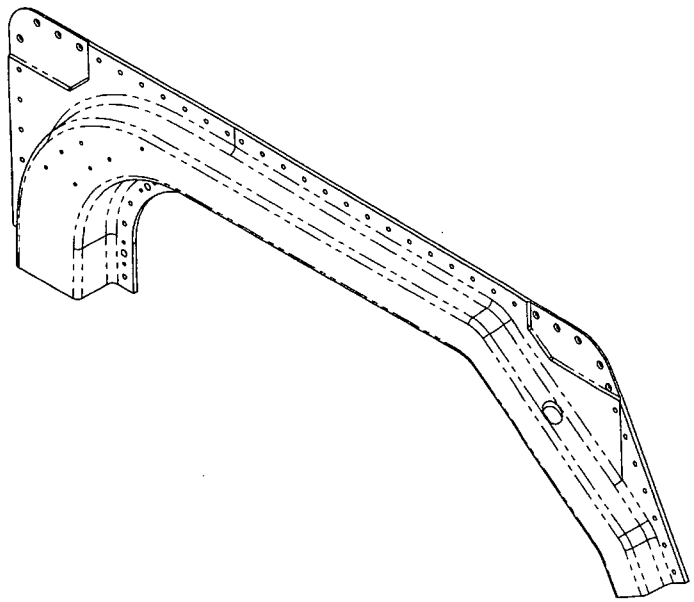

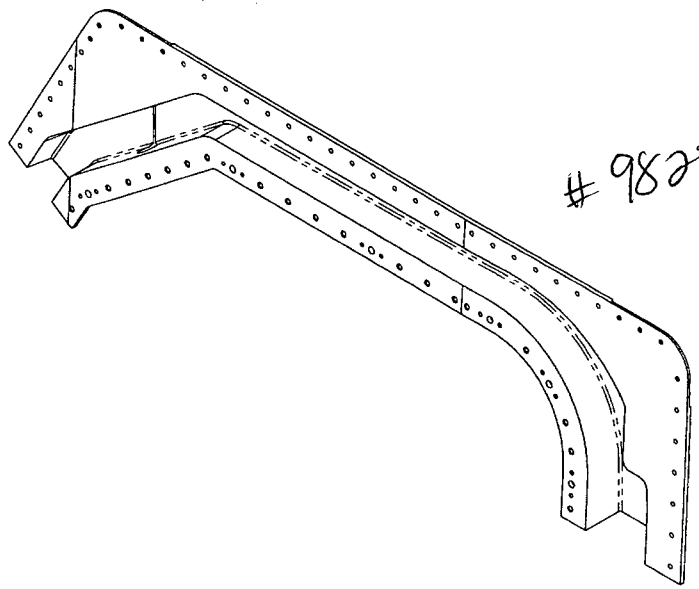

98255

RELEASED
2013 -01- 10

D4500-1 BELL DOOR HEADER (LH)

NOTES:
1) MATERIAL: 6061-T6/T651/T6510/T6511/T62 ALUMINUM BAR
PER QQ-A-225/8 OR AMS-QQ-A-225/8
(OR AMS 4117/4128/4115/4116)
OR QQ-A-200/8 OR AMS-QQ-A-200/8 (OR AMS 4160)
OR ASTM B211 OR ASTM B221
REF DART SPEC M6061T6B
2) FINISH: CHEMICAL CONVERSION COAT PER DART QSI 005 4.1
PRIME TEMPO GREY (4.2.1.3.2) PER DART QSI 005 4.2
3) TOLERANCES: PER DART QSI 018 UNLESS OTHERWISE NOTED
4) UNITS: INCHES UNLESS OTHERWISE NOTED
5) BREAK SHARP EDGES: 0.005 TO 0.010 MAX
6) IDENTIFICATION: N/A
7) WEIGHT: 1.78 lbs
8) RAW MATERIAL SURFACE FINISH SUFFICIENT FOR THIS PART
(NOT NECESSARY TO FACE MATERIAL).
9) ALL NON DIMENSIONED FEATURES PER CAD FILE "D4500-1-REVD.STP"

REV.	DESCRIPTION	BY	DATE
D	SEE SHT 2 ZONE C6 POCKET ADDED TO AFT AREA OF FLANGE SIMILAR TO THE POCKET ON THE FWD AREA OF THE FLANGE. DONE TO FACILITATE OPERATION OF DOOR MECHANISM SAME POCKET ADDED TO -2 PART.	AJS	12.12.03
C	ADDED -2 (RH CONFIGURATION). B8-3 0.38 DIM TYP OUTSIDE PATTERN NOTE DELETED (DRAFTING ERROR). C4-4 Ø0.129 THRU WAS Ø0.225 (DRAFTING ERROR) CSK WAS 0.170. SEE DETAIL C Ø0.201 HOLE WAS Ø0.194 (EXPANDED FOR FLOATING NUTPLATE).	AJS	12.10.10
B	COMPLETE REDESIGN.	AJS	12.09.11
A	NEW ISSUE	AJS	12.03.02

DESIGN	AJS	**DART AEROSPACE LTD** HAWKESBURY, ONTARIO, CANADA
DRAWN	AJS	
CHECKED	AP	DRAWING NO. D4500 — REV. D — SHEET 1 OF 8
MFG. APPR.		
APPROVED		TITLE: BELL DOOR HEADER — SCALE: NTS
DE APPR.		
DATE	12.12.03	

COPYRIGHT © 2012 BY DART AEROSPACE LTD
THIS DOCUMENT IS PRIVATE AND CONFIDENTIAL AND IS SUPPLIED ON THE EXPRESS CONDITION THAT IT IS NOT TO BE USED FOR ANY PURPOSE OR COPIED OR COMMUNICATED TO ANY OTHER PERSON WITHOUT WRITTEN PERMISSION FROM DART AEROSPACE LTD

DQA: _____ Date: _____

NCR: Yes / No

WORK ORDER NON-CONFORMANCE / UPDATE

QA Closed: Date:

Work Order: _____

Part No. _____

NCR No. _____

DISPOSITION

- Rework ☐
- Scrap ☐
- Use-as-is ☐
- Work Order Update ☐

AGAINST DEPARTMENT/PROCESS

Skid-tube ☐	Crosstube ☐	Water Jet ☐	Engineering ☐
Machining ☐	Small Fab ☐	Prod. Eng. Coor. ☐	Quality ☐
Thermoforming ☐	Finishing ☐	Rec/Store/Packaging ☐	Other ☐
Large Fab ☐	Composite ☐	Supplier ☐	☐

Root Cause		Date	Step	Qty	Description of work order update or Non-conformance	Initial Chief Eng	Action Description	Sign & Date	Verification	QC Inspector
Doc/Data	☐									
Equip/Tooling	☐									
Operator	☐									
Material	☐									
Setup	☐									
Other	☐									
Process	☐									
Supplier	☐									
Training	☐									
Unapproved	☐									

FAULT CATEGORY

Landing Gear

- ☐ Bending
- ☐ Centre Not Concentric to O/S
- ☐ Cracks
- ☐ Crushed/Crimped
- ☐ Cuffs
- ☐ Heat Treat
- ☐ Inspection Strip in Tube
- ☐ Ripples in Bend
- ☐ Torque Waves in Extrusion
- ☐ Turning Sequence
- ☐ Wave/Twist in Tube

General

- ☐ Bend
- ☐ BOM/Route
- ☐ Broken/Damaged
- ☐ Burrs
- ☐ Contamination
- ☐ Countersink
- ☐ Cut Too Short
- ☐ Drill Holes
- ☐ Drawing
- ☐ Finish
- ☐ Folio
- ☐ Grain
- ☐ Hardware
- ☐ Inspection Incomplete
- ☐ Instructions Incomplete/Unclear
- ☐ Maintenance
- ☐ Mislabeled
- ☐ Misread
- ☐ Offset
- ☐ Out of Calibration
- ☐ Out of Sequence
- ☐ Outside Dimensions
- ☐ Ovalized
- ☐ Over/Under tolerance
- ☐ Part Incorrect
- ☐ Part Lost/Missing
- ☐ Part Moved
- ☐ Positioned Wrong
- ☐ Power Loss/Surge
- ☐ Pressure/Forced
- ☐ Temperature/Cure
- ☐ Weld
- ☐ Wrong Stock Pulled
- ☐ Other _____

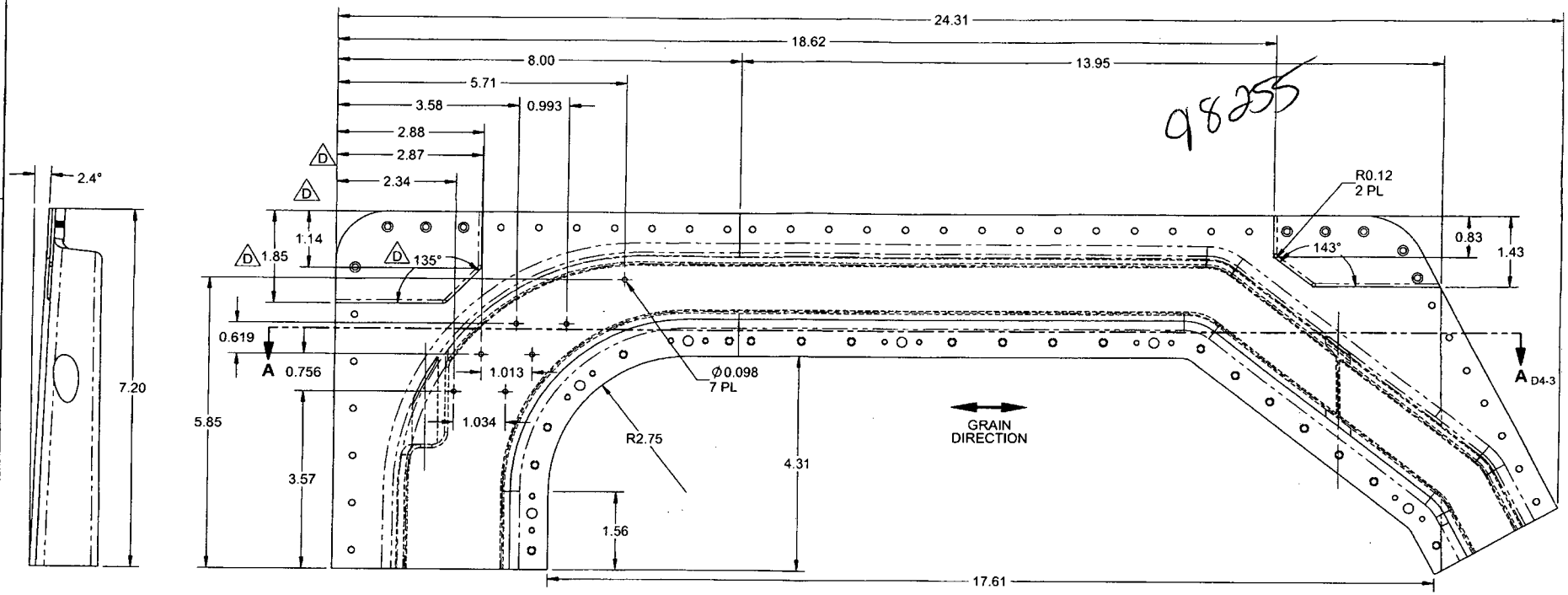

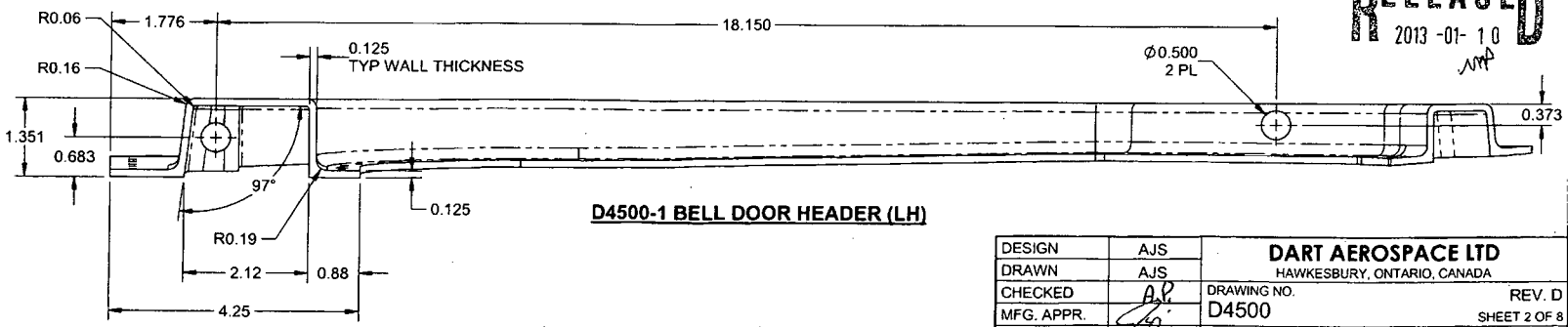

RELEASED
2013 -01- 10

D4500-1 BELL DOOR HEADER (LH)

DESIGN	AJS	**DART AEROSPACE LTD** HAWKESBURY, ONTARIO, CANADA
DRAWN	AJS	
CHECKED		DRAWING NO. D4500 — REV. D — SHEET 2 OF 8
MFG. APPR.		
APPROVED		TITLE: BELL DOOR HEADER — SCALE: NTS
DE APPR.		
DATE	12.12.03	

COPYRIGHT © 2012 BY DART AEROSPACE LTD
THIS DOCUMENT IS PRIVATE AND CONFIDENTIAL AND IS SUPPLIED ON THE EXPRESS CONDITION THAT IT IS NOT TO BE USED FOR ANY PURPOSE OR COPIED OR COMMUNICATED TO ANY OTHER PERSON WITHOUT WRITTEN PERMISSION FROM DART AEROSPACE LTD

DQA: _____ Date: _____

NCR: Yes / No

WORK ORDER NON-CONFORMANCE / UPDATE

QA Closed: Date:

Work Order: _____

Part No. _____

NCR No. _____

DISPOSITION

- Rework ☐
- Scrap ☐
- Use-as-is ☐
- Work Order Update ☐

AGAINST DEPARTMENT/PROCESS

Skid-tube ☐	Crosstube ☐	Water Jet ☐	Engineering ☐
Machining ☐	Small Fab ☐	Prod. Eng. Coor. ☐	Quality ☐
Thermoforming ☐	Finishing ☐	Rec/Store/Packaging ☐	Other ☐
Large Fab ☐	Composite ☐	Supplier ☐	☐

Root Cause		Date	Step	Qty	Description of work order update or Non-conformance	Initial Chief Eng	Action Description	Sign & Date	Verification	QC Inspector
Doc/Data	☐									
Equip/Tooling	☐									
Operator	☐									
Material	☐									
Setup	☐									
Other	☐									
Process	☐									
Supplier	☐									
Training	☐									
Unapproved	☐									

FAULT CATEGORY

Landing Gear

- ☐ Bending
- ☐ Centre Not Concentric to O/S
- ☐ Cracks
- ☐ Crushed/Crimped
- ☐ Cuffs
- ☐ Heat Treat
- ☐ Inspection Strip in Tube
- ☐ Ripples in Bend
- ☐ Torque Waves in Extrusion
- ☐ Turning Sequence
- ☐ Wave/Twist in Tube

General

- ☐ Bend
- ☐ BOM/Route
- ☐ Broken/Damaged
- ☐ Burrs
- ☐ Contamination
- ☐ Countersink
- ☐ Cut Too Short
- ☐ Drill Holes
- ☐ Drawing
- ☐ Finish
- ☐ Folio
- ☐ Grain
- ☐ Hardware
- ☐ Inspection Incomplete
- ☐ Instructions Incomplete/Unclear
- ☐ Maintenance
- ☐ Mislabeled
- ☐ Misread
- ☐ Offset
- ☐ Out of Calibration
- ☐ Out of Sequence
- ☐ Outside Dimensions
- ☐ Ovalized
- ☐ Over/Under tolerance
- ☐ Part Incorrect
- ☐ Part Lost/Missing
- ☐ Part Moved
- ☐ Positioned Wrong
- ☐ Power Loss/Surge
- ☐ Pressure/Forced
- ☐ Temperature/Cure
- ☐ Weld
- ☐ Wrong Stock Pulled
- ☐ Other _____

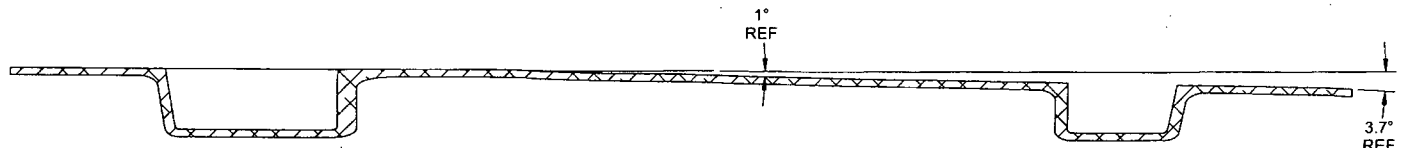

SECTION A-A C1-2
THIS VIEW SHOWN FOR
REFERENCE ONLY

98255

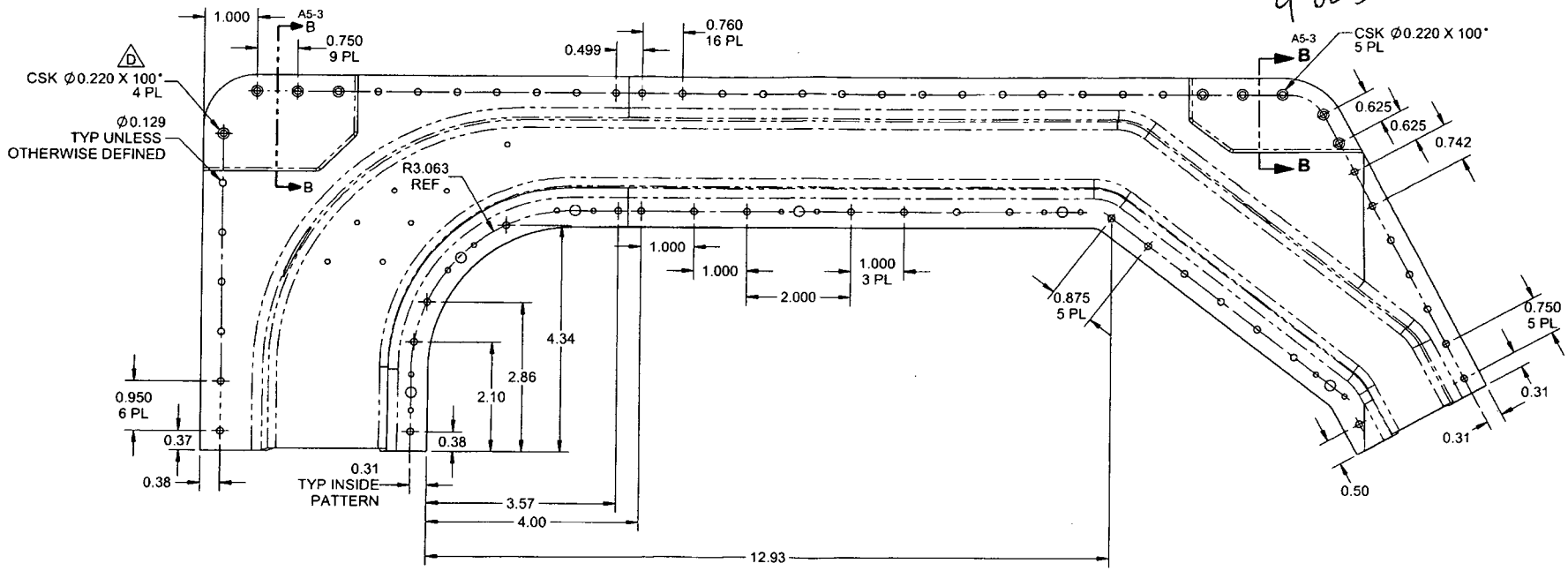

(SUPPLEMENTAL VIEW)

RELEASED
2013 -01- 10

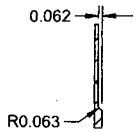

SECTION B-B C2-3
C7-3

DESIGN	AJS	**DART AEROSPACE LTD** HAWKESBURY, ONTARIO, CANADA
DRAWN	AJS	
CHECKED		DRAWING NO. D4500 — REV. D — SHEET 3 OF 8
MFG. APPR.		
APPROVED		TITLE: BELL DOOR HEADER — SCALE: NTS
DE APPR.		
DATE	12.12.03	

COPYRIGHT © 2012 BY DART AEROSPACE LTD
THIS DOCUMENT IS PRIVATE AND CONFIDENTIAL AND IS SUPPLIED ON THE EXPRESS CONDITION THAT IT IS NOT TO BE USED FOR ANY PURPOSE OR COPIED OR COMMUNICATED TO ANY OTHER PERSON WITHOUT WRITTEN PERMISSION FROM DART AEROSPACE LTD

DQA: _____ Date: _____

NCR: Yes / No

WORK ORDER NON-CONFORMANCE / UPDATE

QA Closed: Date:

Work Order: _____

Part No. _____

NCR No. _____

DISPOSITION

- Rework ☐
- Scrap ☐
- Use-as-is ☐
- Work Order Update ☐

AGAINST DEPARTMENT/PROCESS

- Skid-tube ☐
- Machining ☐
- Thermoforming ☐
- Large Fab ☐
- Crosstube ☐
- Small Fab ☐
- Finishing ☐
- Composite ☐
- Water Jet ☐
- Prod. Eng. Coor. ☐
- Rec/Store/Packaging ☐
- Supplier ☐
- Engineering ☐
- Quality ☐
- Other ☐

Root Cause		Date	Step	Qty	Description of work order update or Non-conformance	Initial Chief Eng	Action Description	Sign & Date	Verification	QC Inspector
Doc/Data	☐									
Equip/Tooling	☐									
Operator	☐									
Material	☐									
Setup	☐									
Other	☐									
Process	☐									
Supplier	☐									
Training	☐									
Unapproved	☐									

FAULT CATEGORY

Landing Gear

- ☐ Bending
- ☐ Centre Not Concentric to O/S
- ☐ Cracks
- ☐ Crushed/Crimped
- ☐ Cuffs
- ☐ Heat Treat
- ☐ Inspection Strip in Tube
- ☐ Ripples in Bend
- ☐ Torque Waves in Extrusion
- ☐ Turning Sequence
- ☐ Wave/Twist in Tube

General

- ☐ Bend
- ☐ BOM/Route
- ☐ Broken/Damaged
- ☐ Burrs
- ☐ Contamination
- ☐ Countersink
- ☐ Cut Too Short
- ☐ Drill Holes
- ☐ Drawing
- ☐ Finish
- ☐ Folio
- ☐ Grain
- ☐ Hardware
- ☐ Inspection Incomplete
- ☐ Instructions Incomplete/Unclear
- ☐ Maintenance
- ☐ Mislabeled
- ☐ Misread
- ☐ Offset
- ☐ Out of Calibration
- ☐ Out of Sequence
- ☐ Outside Dimensions
- ☐ Ovalized
- ☐ Over/Under tolerance
- ☐ Part Incorrect
- ☐ Part Lost/Missing
- ☐ Part Moved
- ☐ Positioned Wrong
- ☐ Power Loss/Surge
- ☐ Pressure/Forced
- ☐ Temperature/Cure
- ☐ Weld
- ☐ Wrong Stock Pulled
- ☐ Other _____

Q 8255

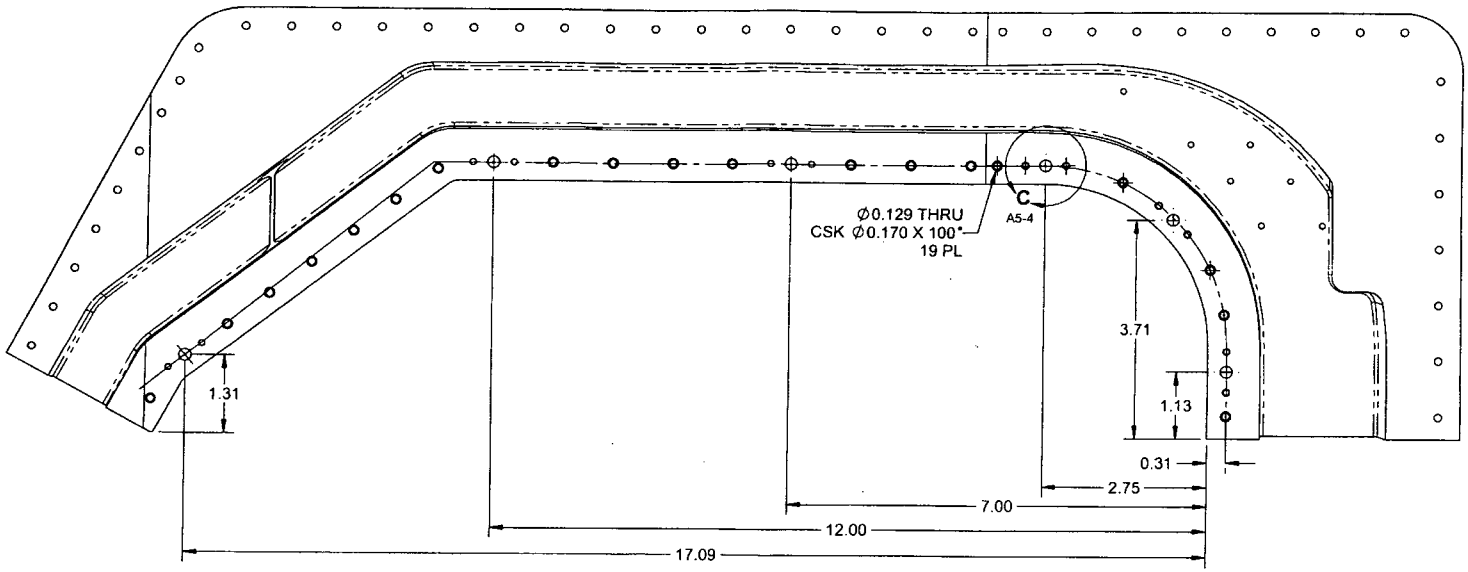

(SUPPLEMENTAL VIEW
NUTPLATE LOCATIONS)

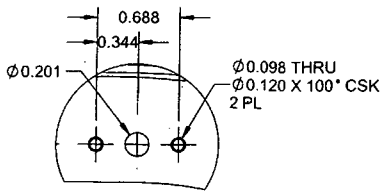

DETAIL C C3-4
NUTPLATE HOLE DETAIL 6 PL
SCALE 2X

RELEASED
2013 -01- 10

DESIGN	AJS	**DART AEROSPACE LTD** HAWKESBURY, ONTARIO, CANADA
DRAWN	AJS	
CHECKED		DRAWING NO. D4500 — REV. D — SHEET 4 OF 8
MFG. APPR.		
APPROVED		TITLE: BELL DOOR HEADER — SCALE: NTS
DE APPR.		
DATE	12.12.03	

COPYRIGHT © 2012 BY DART AEROSPACE LTD
THIS DOCUMENT IS PRIVATE AND CONFIDENTIAL AND IS SUPPLIED ON THE EXPRESS CONDITION THAT IT IS NOT TO BE USED FOR ANY PURPOSE OR COPIED OR COMMUNICATED TO ANY OTHER PERSON WITHOUT WRITTEN PERMISSION FROM DART AEROSPACE LTD

DQA: _____ Date: _____

NCR: Yes / No

WORK ORDER NON-CONFORMANCE / UPDATE

QA Closed: Date:

Work Order: _____

Part No. _____

NCR No. _____

DISPOSITION

- Rework ☐
- Scrap ☐
- Use-as-is ☐
- Work Order Update ☐

AGAINST DEPARTMENT/PROCESS

- Skid-tube ☐
- Machining ☐
- Thermoforming ☐
- Large Fab ☐
- Crosstube ☐
- Small Fab ☐
- Finishing ☐
- Composite ☐
- Water Jet ☐
- Prod. Eng. Coor. ☐
- Rec/Store/Packaging ☐
- Supplier ☐
- Engineering ☐
- Quality ☐
- Other ☐

Root Cause		Date	Step	Qty	Description of work order update or Non-conformance	Initial Chief Eng	Action Description	Sign & Date	Verification	QC Inspector
Doc/Data	☐									
Equip/Tooling	☐									
Operator	☐									
Material	☐									
Setup	☐									
Other	☐									
Process	☐									
Supplier	☐									
Training	☐									
Unapproved	☐									

FAULT CATEGORY

Landing Gear

- ☐ Bending
- ☐ Centre Not Concentric to O/S
- ☐ Cracks
- ☐ Crushed/Crimped
- ☐ Cuffs
- ☐ Heat Treat
- ☐ Inspection Strip in Tube
- ☐ Ripples in Bend
- ☐ Torque Waves in Extrusion
- ☐ Turning Sequence
- ☐ Wave/Twist in Tube

General

- ☐ Bend
- ☐ BOM/Route
- ☐ Broken/Damaged
- ☐ Burrs
- ☐ Contamination
- ☐ Countersink
- ☐ Cut Too Short
- ☐ Drill Holes
- ☐ Drawing
- ☐ Finish
- ☐ Folio
- ☐ Grain
- ☐ Hardware
- ☐ Inspection Incomplete
- ☐ Instructions Incomplete/Unclear
- ☐ Maintenance
- ☐ Mislabeled
- ☐ Misread
- ☐ Offset
- ☐ Out of Calibration
- ☐ Out of Sequence
- ☐ Outside Dimensions
- ☐ Ovalized
- ☐ Over/Under tolerance
- ☐ Part Incorrect
- ☐ Part Lost/Missing
- ☐ Part Moved
- ☐ Positioned Wrong
- ☐ Power Loss/Surge
- ☐ Pressure/Forced
- ☐ Temperature/Cure
- ☐ Weld
- ☐ Wrong Stock Pulled
- ☐ Other

_____

_____

_____

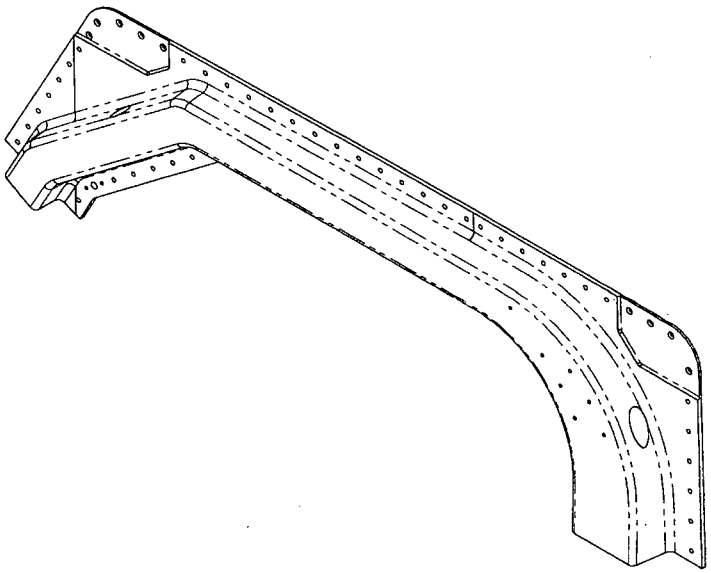

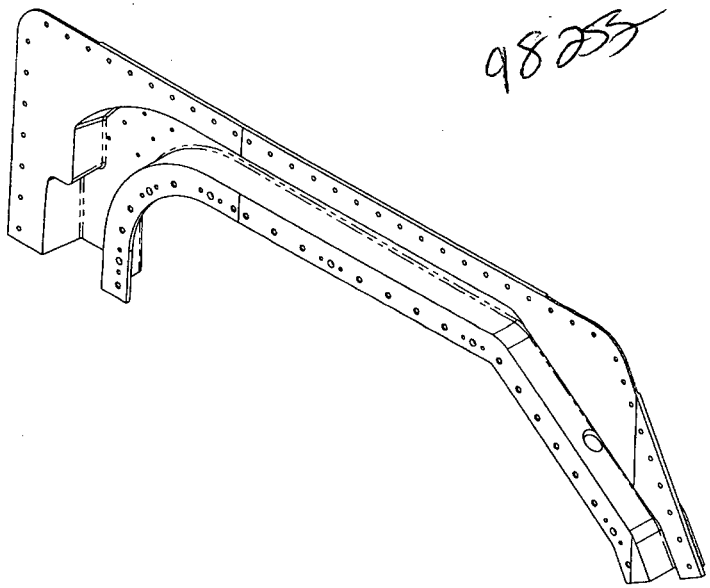

98255

D4500-2 BELL DOOR HEADER (RH)

RELEASED
2013 -01- 10

NOTES:
1) MATERIAL: 6061-T6/T651/T6510/T6511/T62 ALUMINUM BAR
PER QQ-A-225/8 OR AMS-QQ-A-225/8
(OR AMS 4117/4128/4115/4116)
OR QQ-A-200/8 OR AMS-QQ-A-200/8 (OR AMS 4160)
OR ASTM B211 OR ASTM B221
REF DART SPEC M6061T6B
2) FINISH: CHEMICAL CONVERSION COAT PER DART QSI 005 4.1
PRIME TEMPO GREY (4.2.1.3.2) PER DART QSI 005 4.2
3) TOLERANCES: PER DART QSI 018 UNLESS OTHERWISE NOTED
4) UNITS: INCHES UNLESS OTHERWISE NOTED
5) BREAK SHARP EDGES: 0.005 TO 0.010 MAX
6) IDENTIFICATION: N/A
7) WEIGHT: 1.78 lbs
8) RAW MATERIAL SURFACE FINISH SUFFICIENT FOR THIS PART
(NOT NECESSARY TO FACE MATERIAL).
9) ALL NON DIMENSIONED FEATURES PER CAD FILE "D4500-2-REVD.STP"

DESIGN	AJS	**DART AEROSPACE LTD** HAWKESBURY, ONTARIO, CANADA
DRAWN	AJS	
CHECKED		DRAWING NO. D4500 — REV. D — SHEET 5 OF 8
MFG. APPR.		
APPROVED		TITLE — SCALE
DE APPR.		BELL DOOR HEADER — NTS
DATE	12.12.03	

COPYRIGHT © 2012 BY DART AEROSPACE LTD
THIS DOCUMENT IS PRIVATE AND CONFIDENTIAL AND IS SUPPLIED ON THE EXPRESS CONDITION THAT IT IS NOT TO BE USED FOR ANY PURPOSE OR COPIED OR COMMUNICATED TO ANY OTHER PERSON WITHOUT WRITTEN PERMISSION FROM DART AEROSPACE LTD

DQA: _____ Date: _____

NCR: Yes / No

WORK ORDER NON-CONFORMANCE / UPDATE

QA Closed: Date:

Work Order: _____

Part No. _____

NCR No. _____

DISPOSITION

- Rework ☐
- Scrap ☐
- Use-as-is ☐
- Work Order Update ☐

AGAINST DEPARTMENT/PROCESS

Skid-tube ☐	Crosstube ☐	Water Jet ☐	Engineering ☐
Machining ☐	Small Fab ☐	Prod. Eng. Coor. ☐	Quality ☐
Thermoforming ☐	Finishing ☐	Rec/Store/Packaging ☐	Other ☐
Large Fab ☐	Composite ☐	Supplier ☐	☐

Root Cause		Date	Step	Qty	Description of work order update or Non-conformance	Initial Chief Eng	Action Description	Sign & Date	Verification	QC Inspector
Doc/Data	☐									
Equip/Tooling	☐									
Operator	☐									
Material	☐									
Setup	☐									
Other	☐									
Process	☐									
Supplier	☐									
Training	☐									
Unapproved	☐									

FAULT CATEGORY

Landing Gear

- ☐ Bending
- ☐ Centre Not Concentric to O/S
- ☐ Cracks
- ☐ Crushed/Crimped
- ☐ Cuffs
- ☐ Heat Treat
- ☐ Inspection Strip in Tube
- ☐ Ripples in Bend
- ☐ Torque Waves in Extrusion
- ☐ Turning Sequence
- ☐ Wave/Twist in Tube

General

- ☐ Bend
- ☐ BOM/Route
- ☐ Broken/Damaged
- ☐ Burrs
- ☐ Contamination
- ☐ Countersink
- ☐ Cut Too Short
- ☐ Drill Holes
- ☐ Drawing
- ☐ Finish
- ☐ Folio
- ☐ Grain
- ☐ Hardware
- ☐ Inspection Incomplete
- ☐ Instructions Incomplete/Unclear
- ☐ Maintenance
- ☐ Mislabeled
- ☐ Misread
- ☐ Offset
- ☐ Out of Calibration
- ☐ Out of Sequence
- ☐ Outside Dimensions
- ☐ Ovalized
- ☐ Over/Under tolerance
- ☐ Part Incorrect
- ☐ Part Lost/Missing
- ☐ Part Moved
- ☐ Positioned Wrong
- ☐ Power Loss/Surge
- ☐ Pressure/Forced
- ☐ Temperature/Cure
- ☐ Weld
- ☐ Wrong Stock Pulled
- ☐ Other

_____

_____

_____

98255

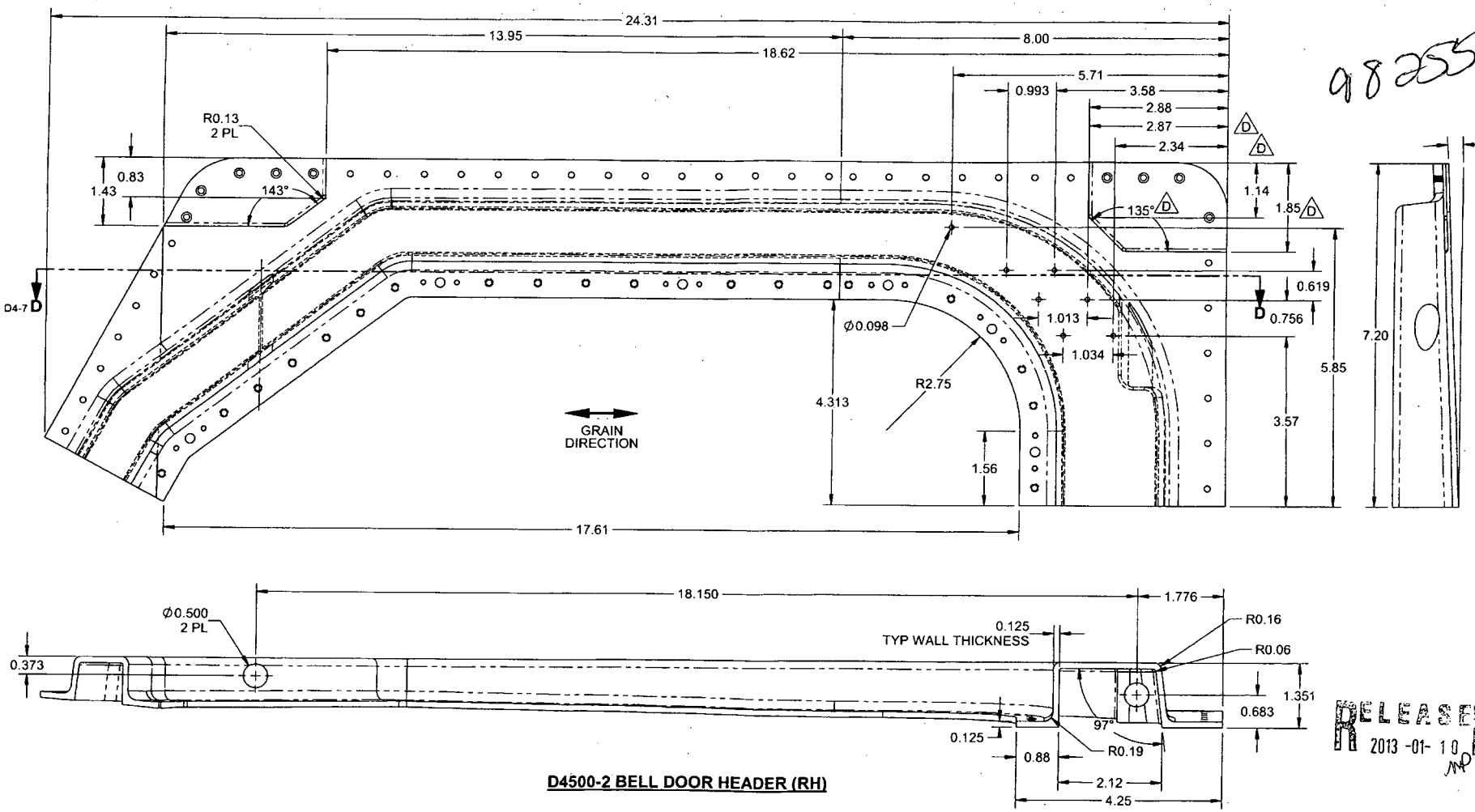

D4500-2 BELL DOOR HEADER (RH)

RELEASED
2013 -01- 10

DESIGN	AJS	**DART AEROSPACE LTD** HAWKESBURY, ONTARIO, CANADA
DRAWN	AJS	
CHECKED		DRAWING NO. D4500 — REV. D — SHEET 6 OF 8
MFG. APPR.		
APPROVED		TITLE: BELL DOOR HEADER — SCALE: NTS
DE APPR.		
DATE	12.12.03	

COPYRIGHT © 2012 BY DART AEROSPACE LTD
THIS DOCUMENT IS PRIVATE AND CONFIDENTIAL AND IS SUPPLIED ON THE EXPRESS CONDITION THAT IT IS NOT TO BE USED FOR ANY PURPOSE OR COPIED OR COMMUNICATED TO ANY OTHER PERSON WITHOUT WRITTEN PERMISSION FROM DART AEROSPACE LTD.

DQA: _____ Date: _____

NCR: Yes / No

WORK ORDER NON-CONFORMANCE / UPDATE

QA Closed: Date:

Work Order: _____

Part No. _____

NCR No. _____

DISPOSITION

- Rework ☐
- Scrap ☐
- Use-as-is ☐
- Work Order Update ☐

AGAINST DEPARTMENT/PROCESS

- Skid-tube ☐
- Machining ☐
- Thermoforming ☐
- Large Fab ☐
- Crosstube ☐
- Small Fab ☐
- Finishing ☐
- Composite ☐
- Water Jet ☐
- Prod. Eng. Coor. ☐
- Rec/Store/Packaging ☐
- Supplier ☐
- Engineering ☐
- Quality ☐
- Other ☐
- ☐

Root Cause		Date	Step	Qty	Description of work order update or Non-conformance	Initial Chief Eng	Action Description	Sign & Date	Verification	QC Inspector
Doc/Data	☐									
Equip/Tooling	☐									
Operator	☐									
Material	☐									
Setup	☐									
Other	☐									
Process	☐									
Supplier	☐									
Training	☐									
Unapproved	☐									

FAULT CATEGORY

Landing Gear

- ☐ Bending
- ☐ Centre Not Concentric to O/S
- ☐ Cracks
- ☐ Crushed/Crimped
- ☐ Cuffs
- ☐ Heat Treat
- ☐ Inspection Strip in Tube
- ☐ Ripples in Bend
- ☐ Torque Waves in Extrusion
- ☐ Turning Sequence
- ☐ Wave/Twist in Tube

General

- ☐ Bend
- ☐ BOM/Route
- ☐ Broken/Damaged
- ☐ Burrs
- ☐ Contamination
- ☐ Countersink
- ☐ Cut Too Short
- ☐ Drill Holes
- ☐ Drawing
- ☐ Finish
- ☐ Folio
- ☐ Grain
- ☐ Hardware
- ☐ Inspection Incomplete
- ☐ Instructions Incomplete/Unclear
- ☐ Maintenance
- ☐ Mislabeled
- ☐ Misread
- ☐ Offset
- ☐ Out of Calibration
- ☐ Out of Sequence
- ☐ Outside Dimensions
- ☐ Ovalized
- ☐ Over/Under tolerance
- ☐ Part Incorrect
- ☐ Part Lost/Missing
- ☐ Part Moved
- ☐ Positioned Wrong
- ☐ Power Loss/Surge
- ☐ Pressure/Forced
- ☐ Temperature/Cure
- ☐ Weld
- ☐ Wrong Stock Pulled
- ☐ Other _____

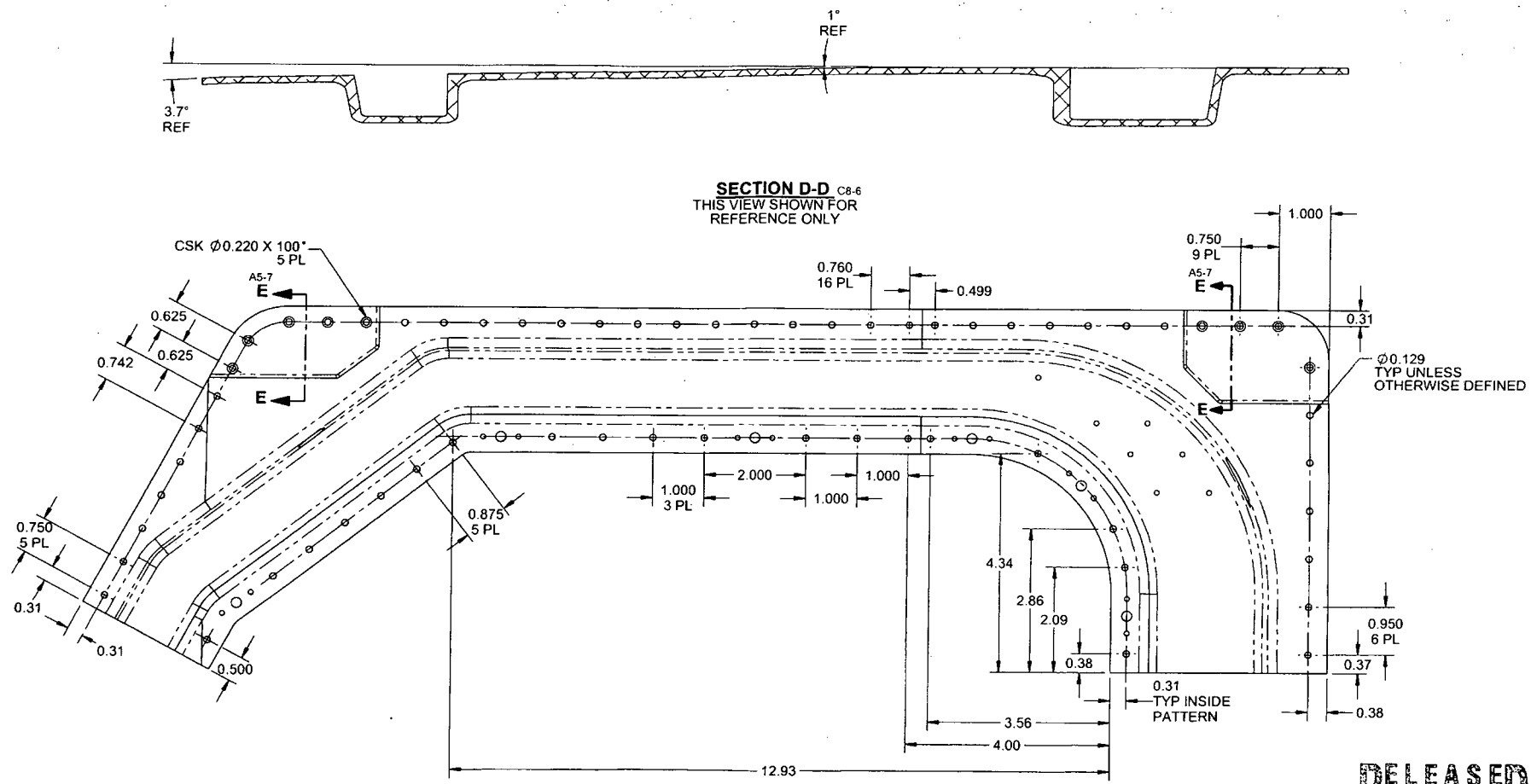

RELEASED
2013 -01- 10

DESIGN	AJS	**DART AEROSPACE LTD** HAWKESBURY, ONTARIO, CANADA
DRAWN	AJS	
CHECKED		DRAWING NO. D4500 — REV. D — SHEET 7 OF 8
MFG. APPR.		
APPROVED		TITLE: BELL DOOR HEADER — SCALE: NTS
DE APPR.		
DATE	12.12.03	

COPYRIGHT © 2012 BY DART AEROSPACE LTD
THIS DOCUMENT IS PRIVATE AND CONFIDENTIAL AND IS SUPPLIED ON THE EXPRESS CONDITION THAT IT IS NOT TO BE USED FOR ANY PURPOSE OR COPIED OR COMMUNICATED TO ANY OTHER PERSON WITHOUT WRITTEN PERMISSION FROM DART AEROSPACE LTD

DQA: _____ Date: _____

NCR: Yes / No

WORK ORDER NON-CONFORMANCE / UPDATE

QA Closed: Date:

Work Order: _____

Part No. _____

NCR No. _____

DISPOSITION

- Rework ☐
- Scrap ☐
- Use-as-is ☐
- Work Order Update ☐

AGAINST DEPARTMENT/PROCESS

Skid-tube ☐	Crosstube ☐	Water Jet ☐	Engineering ☐
Machining ☐	Small Fab ☐	Prod. Eng. Coor. ☐	Quality ☐
Thermoforming ☐	Finishing ☐	Rec/Store/Packaging ☐	Other ☐
Large Fab ☐	Composite ☐	Supplier ☐	☐

Root Cause		Date	Step	Qty	Description of work order update or Non-conformance	Initial Chief Eng	Action Description	Sign & Date	Verification	QC Inspector
Doc/Data	☐									
Equip/Tooling	☐									
Operator	☐									
Material	☐									
Setup	☐									
Other	☐									
Process	☐									
Supplier	☐									
Training	☐									
Unapproved	☐									

FAULT CATEGORY

Landing Gear

- ☐ Bending
- ☐ Centre Not Concentric to O/S
- ☐ Cracks
- ☐ Crushed/Crimped
- ☐ Cuffs
- ☐ Heat Treat
- ☐ Inspection Strip in Tube
- ☐ Ripples in Bend
- ☐ Torque Waves in Extrusion
- ☐ Turning Sequence
- ☐ Wave/Twist in Tube

General

- ☐ Bend
- ☐ BOM/Route
- ☐ Broken/Damaged
- ☐ Burrs
- ☐ Contamination
- ☐ Countersink
- ☐ Cut Too Short
- ☐ Drill Holes
- ☐ Drawing
- ☐ Finish
- ☐ Folio
- ☐ Grain
- ☐ Hardware
- ☐ Inspection Incomplete
- ☐ Instructions Incomplete/Unclear
- ☐ Maintenance
- ☐ Mislabeled
- ☐ Misread
- ☐ Offset
- ☐ Out of Calibration
- ☐ Out of Sequence
- ☐ Outside Dimensions
- ☐ Ovalized
- ☐ Over/Under tolerance
- ☐ Part Incorrect
- ☐ Part Lost/Missing
- ☐ Part Moved
- ☐ Positioned Wrong
- ☐ Power Loss/Surge
- ☐ Pressure/Forced
- ☐ Temperature/Cure
- ☐ Weld
- ☐ Wrong Stock Pulled
- ☐ Other _____

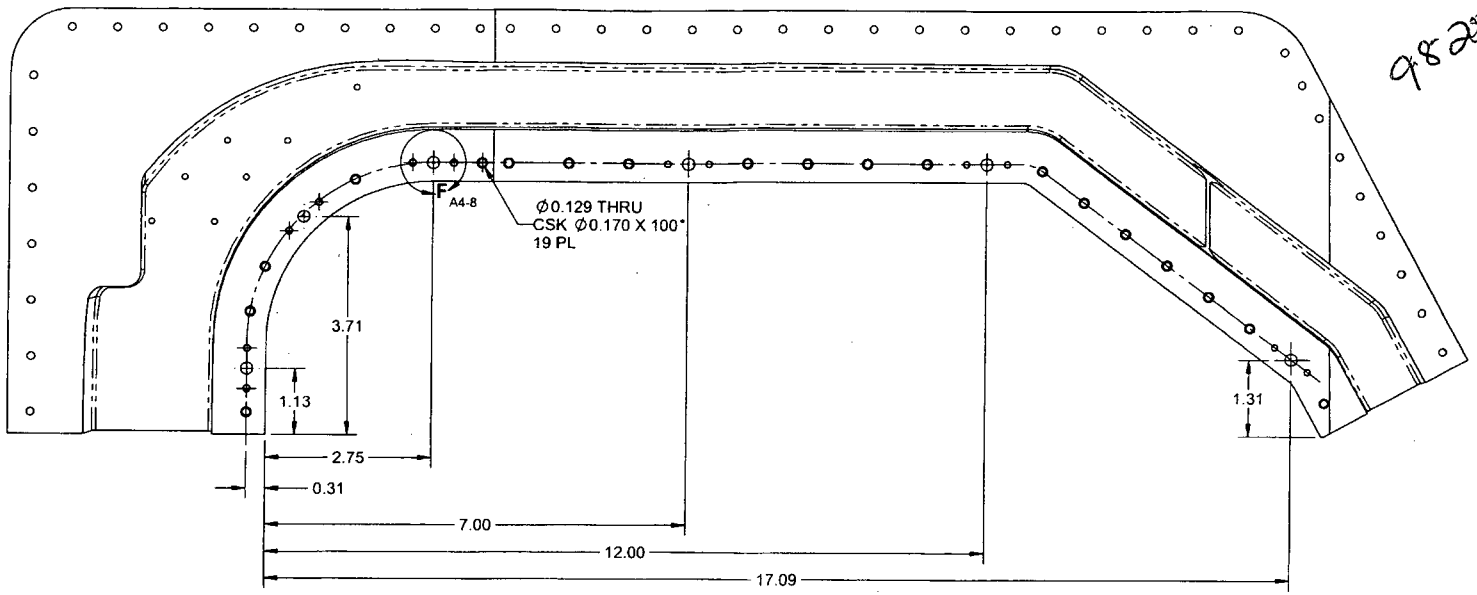

(SUPPLEMENTAL VIEW
NUTPLATE LOCATIONS)

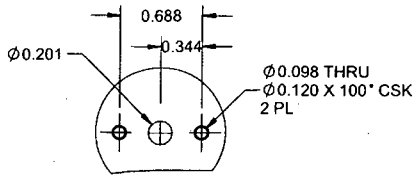

DETAIL F C6-8
NUTPLATE HOLE DETAIL 6 PL
(SCALE 2X)

98255

RELEASED
2013 -01- 10

DESIGN	AJS	**DART AEROSPACE LTD** HAWKESBURY, ONTARIO, CANADA
DRAWN	AJS	
CHECKED		DRAWING NO. D4500 — REV. D — SHEET 8 OF 8
MFG. APPR.		
APPROVED		TITLE BELL DOOR HEADER — SCALE NTS
DE APPR.		
DATE	12.12.03	

COPYRIGHT © 2012 BY DART AEROSPACE LTD
THIS DOCUMENT IS PRIVATE AND CONFIDENTIAL AND IS SUPPLIED ON THE EXPRESS CONDITION THAT IT IS NOT TO BE USED FOR ANY PURPOSE OR COPIED OR COMMUNICATED TO ANY OTHER PERSON WITHOUT WRITTEN PERMISSION FROM DART AEROSPACE LTD

DQA: _____ Date: _____

NCR: Yes / No

WORK ORDER NON-CONFORMANCE / UPDATE

QA Closed: Date:

Work Order: _____

Part No. _____

NCR No. _____

DISPOSITION

- Rework ☐
- Scrap ☐
- Use-as-is ☐
- Work Order Update ☐

AGAINST DEPARTMENT/PROCESS

Skid-tube ☐	Crosstube ☐	Water Jet ☐	Engineering ☐
Machining ☐	Small Fab ☐	Prod. Eng. Coor. ☐	Quality ☐
Thermoforming ☐	Finishing ☐	Rec/Store/Packaging ☐	Other ☐
Large Fab ☐	Composite ☐	Supplier ☐	☐

Root Cause		Date	Step	Qty	Description of work order update or Non-conformance	Initial Chief Eng	Action Description	Sign & Date	Verification	QC Inspector
Doc/Data	☐									
Equip/Tooling	☐									
Operator	☐									
Material	☐									
Setup	☐									
Other	☐									
Process	☐									
Supplier	☐									
Training	☐									
Unapproved	☐									

FAULT CATEGORY

Landing Gear

- ☐ Bending
- ☐ Centre Not Concentric to O/S
- ☐ Cracks
- ☐ Crushed/Crimped
- ☐ Cuffs
- ☐ Heat Treat
- ☐ Inspection Strip in Tube
- ☐ Ripples in Bend
- ☐ Torque Waves in Extrusion
- ☐ Turning Sequence
- ☐ Wave/Twist in Tube

General

- ☐ Bend
- ☐ BOM/Route
- ☐ Broken/Damaged
- ☐ Burrs
- ☐ Contamination
- ☐ Countersink
- ☐ Cut Too Short
- ☐ Drill Holes
- ☐ Drawing
- ☐ Finish
- ☐ Folio
- ☐ Grain
- ☐ Hardware
- ☐ Inspection Incomplete
- ☐ Instructions Incomplete/Unclear
- ☐ Maintenance
- ☐ Mislabeled
- ☐ Misread
- ☐ Offset
- ☐ Out of Calibration
- ☐ Out of Sequence
- ☐ Outside Dimensions
- ☐ Ovalized
- ☐ Over/Under tolerance
- ☐ Part Incorrect
- ☐ Part Lost/Missing
- ☐ Part Moved
- ☐ Positioned Wrong
- ☐ Power Loss/Surge
- ☐ Pressure/Forced
- ☐ Temperature/Cure
- ☐ Weld
- ☐ Wrong Stock Pulled
- ☐ Other _____

Wejay
MACHINE PRODUCTS CO. LTD.

Packing Slip 36234

600 O'CONNOR DRIVE, KINGSTON, ONTARIO K7P 1N3
TEL: 613-384-1662 FAX: 613-384-2997
www.wejay.com

SOLD TO
Dart Aerospace
1270 Aberdeen Street
Hawkesbury ON K6A 1K7

SHIP TO
Dart Aerospace
1270 Aberdeen Street
Hawkesbury ON K6A 1K

INVOICE DATE	YOUR ORDER NO.	DATE ORDERED	SHIPPED VIA
	PO19474	03/31/13	Best way

CUSTOMER CODE	PROV. LIC. NO.	Extra	Exempt	TERMS
DART		☐	☐	

QUANTITY ORDERED	B.O.	QUANTITY SHIPPED	DESCRIPTION	UNIT PRICE	AMOUNT
5	0	5	Fabricate bell door header as per drawing D4500 Rev. D D4500-1P B98255		
			Required by: May 15, 2013		

SP13-527

RELEASE NOTE

I certify that the items listed hereon have been inspected and tested and conform to all specifications and requirements in the contract or purchase order.

Inspection Supervisor

WMP 03

May 23, 2013

G.S.T.

P.S.T.

ORDER: COMPLETE ☐ PARTIAL ☐

TOTAL

RECEIVED BY

NO GOODS RETURNED WITHOUT PRIOR AUTHORIZATION

.5% PER MONTH (18% PER ANNUM) CHARGED ON OVERDUE ACCOUNTS

Chantal Lavoie

From: Scott Dennis <scott@wejay.com>
Sent: April 24, 2013 2:44 PM
To: Chantal Lavoie
Cc: Ed Jansen
Subject: Door headers

Hi Chantal, Ed and I were looking at our production schedule for the 5 axis machines. In order to fulfill the current order for the deflectors for may 3rd we have to bump the outstanding orders for the door headers. Could we set the delivery date for May 16?

Let me know what would be possible.
Thank you.

Scott Dennis
Wejay Machine Products Co. Ltd.
613-384-1662
scott@wejay.com

Dart Aerospace Ltd.
1270 Aberdeen Street
Hawkesbury, ON K6A 1K7
Tel: 613 632 9577
Fax: 613 632 1053

PURCHASE ORDER

Purchase Order ID PO19474

Purchase Order Date 4/03/13
PO Print Date 4/03/13

Order From : VC-WMP001

WEJAY MACHINE PRODUCTS CO. LTD
600 O'CONNOR DRIVE
KINGSTON, ONTARIO K7P 1N3
CANADA

Contact Name		**Buyer**	Chantal Lavoie
Vendor Phone	613-384-1662	**Requisition Nbr**	
Vendor Fax	613-384-2997	**Tax Resale Nbr**	10127-2607
Vendor Account Nbr		**Terms**	COD
		Currency	CAD
		FOB	Destination-Collect

Ship To : DART AEROSPACE LTD 1270 ABERDEEN
HAWKESBURY, ON K6A 1K7
CANADA

FAXED 613 632 1053

Line Nbr	Reference / Revision ID / Vendor Part Number	Description/ Mfg ID	Req Date/ Taxable	Req Qty/ Unit of Measure	Ship Method	Unit Price	Extended Price
1	D4500-1P	Bell Door Header	4/24/13 Yes	5.00 Each	FedEx PI collect	$1,028.0000	$5,140.00

Special Inst: AS PER DWG D4500 REV. D
B98255

PLEASE ADVISE DELIVERY

SP 13-5-27

PO Total: $5,140.00

CERTIFICATE OF CONFORMITY
REQ'D UPON DELIVERY

No substitution or deviation without consent.
Certificate of Conformity or Material Certification required - YES NO

Change Nbr: 1 **Change Date:** 4/03/13

Wejay
MACHINE PRODUCTS CO. LTD.

600 O'CONNOR DRIVE, KINGSTON, ONTARIO K7P 1N3 PHONE: (613) 384-1662 FAX: (613) 384-2997

CERTIFICATE OF COMPLIANCE

CUSTOMER: Dart Aerospace Ltd.	**DATE:** May 23 2013
	P.O.# PO19474
	WEJAY JOB# 36234

I hereby certify that the following material has been inspected/tested and conforms to the requirements and specifications as stated in your contract and as noted below. Any exceptions will be listed as NCR items.

PART NO.	QTY.	PROCESS (ES)	SPECIFICATION / REV
D4500-1P 'Bell Door Header (LH)'	5	Machined complete per drawing req'ts.	D4500 / rev. D

Note: 1) Material supplied by 'Dart Aerospace'

Records of Inspection/Test will be retained for 5 years minimum.

Yours truly,

WMP 03

Clifford Smith
Authorized Q.A. Signatory

Measurement Plan	D4500 rev PB2	Date	May 22, 2013	Time 1:36:45 pm	1
Customer	Dart Aerospace Ltd.	Customer P.O.	P017497		
Drawing #	D4500	Drawing rev	D		
Part Number	D4500-1 P	E.C.O.	--		
Part Name	Bell Door Header (LH)	Material	Alum. Alloy 6061-T6511		
Serial #	001	Inspected by	Cliff Smith		
Job #	36234	Signature:			

Wejay MACHINE PRODUCTS CO. LTD.

ZEISS

WMP 03 ACCEPTED

Overall Result

All Characteristics: 299
Out of tolerance: 0
Over Warning Limit: 0
Not Calculated: 0

Comment: Note: Material supplied by DART Aerospace Ltd

1ST ARTICLE

Feature		ID	Actual	Nominal	Pos Tol.	Neg Tol.	Deviation	<--|-->
1	2_C8	Y	-7.1988	-7.2000	0.0300	-0.0300	0.0012	|-
Inside bott. face_flat		GDT Flat	0.0017	0.0000	0.0100		0.0017	|-
2	2_A6	X	-4.2469	-4.2500	0.0300	-0.0300	0.0031	|-
3	2_B3_X	Dist	17.6122	17.6100	0.0300	-0.0300	0.0022	|-
3a	2_B4	CartDist	4.3135	4.3100	0.0300	-0.0300	0.0035	|-
4	2_A7	Z	1.3528	1.3510	0.0100	-0.0100	0.0018	|-
5	2_A6_X	Dist	0.8790	0.8800	0.0300	-0.0300	-0.0010	-|
6	2_A6_X	Dist	2.1210	2.1200	0.0300	-0.0300	0.0010	|-
7	2_A6	A	96.9475	97.0000	0.5000	-0.5000	-0.0525	-|
8	2_B5_Y	Dist	1.5649	1.5600	0.0300	-0.0300	0.0049	|-
9	2_C5	R	2.7512	2.7500	0.0300	-0.0300	0.0012	|-
10a	2_B2	D	0.5000	0.5000	0.0060	-0.0010	0.0000	---|
10b	2_B2	D	0.5004	0.5000	0.0060	-0.0010	0.0004	---|
11	2_B7	X	-1.7725	-1.7760	0.0100	-0.0100	0.0035	|--
12	2_A7	Z	-0.6832	-0.6830	0.0100	-0.0100	-0.0002	-|
13	2_B1	Z	0.3727	0.3730	0.0100	-0.0100	-0.0003	-|
14	2_B4	X	-18.1519	-18.1500	0.0100	-0.0100	-0.0019	-|
15a	2_C5	D	0.0977	0.0980	0.0040	-0.0010	-0.0003	---|
16	2_D7	X	-2.3398	-2.3400	0.0300	-0.0300	0.0002	|-
17a	2_B7	Y	3.5706	3.5700	0.0300	-0.0300	0.0006	|-
15b	2_C5	D	0.0978	0.0980	0.0040	-0.0010	-0.0002	---|
17b	2_B7	Y	3.5709	3.5700	0.0300	-0.0300	0.0009	|-
18	2_C6_X	Dist	1.0345	1.0340	0.0100	-0.0100	0.0005	|-
15c	2_C5	D	0.0977	0.0980	0.0040	-0.0010	-0.0003	---|
19	2_D6	X	-2.8807	-2.8800	0.0300	-0.0300	-0.0007	-|
20a	2_C7_Y	Dist	0.7568	0.7560	0.0100	-0.0100	0.0008	|-
15d	2_C5	D	0.0980	0.0980	0.0040	-0.0010	0.0000	---|
20b	2_C7_Y	Dist	0.7569	0.7560	0.0100	-0.0100	0.0009	|-
21	2_C6_X	Dist	1.0136	1.0130	0.0100	-0.0100	0.0006	|-
15e	2_C5	D	0.0977	0.0980	0.0040	-0.0010	-0.0003	---|
22	2_D6	X	-3.5748	-3.5800	0.0300	-0.0300	0.0052	|-
23a	2_C7_Y	Dist	0.6189	0.6190	0.0100	-0.0100	-0.0001	-|

Measurement Plan D4500 rev PB2 Date May 22, 2013 2

Part Number D4500-1 P Serial # 001 Time 1:36:45 pm

Wejay

Feature		ID	Actual	Nominal	pos Tol	neg Tol	Diff	<--|-->
15f	2_C5	D	0.0978	0.0980	0.0040	-0.0010	-0.0002	---|
23b	2_C7_Y	Dist	0.6191	0.6190	0.0100	-0.0100	0.0001	|-
24	2_D6_X	Dist	0.9929	0.9930	0.0100	-0.0100	-0.0001	-|
15g	2_C5	D	0.0979	0.0980	0.0040	-0.0010	-0.0001	---|
25	2_D6	X	-5.7095	-5.7100	0.0300	-0.0300	0.0005	|-
26	2_C7	Y	5.8463	5.8500	0.0300	-0.0300	-0.0037	-|
27	2_D8	A2	2.3697	2.4000	0.5000	-0.5000	-0.0303	-|
28	2_D4	X	-24.3040	-24.3100	0.0300	-0.0300	0.0060	|-
29	3_D4	A1	-1.0108	-1.0000	0.5000	-0.5000	-0.0108	-|
30	3_D1	A1	-3.7480	-3.7000	0.5000	-0.5000	-0.0480	-|
31a	3_C8	D	0.1285	0.1290	0.0050	-0.0010	-0.0005	----|
32a	3_B7	X	-0.3718	-0.3800	0.0300	-0.0300	0.0082	|--
33	3_B7	Y	0.3728	0.3700	0.0300	-0.0300	0.0028	|-
31b	3_C8(1)	D	0.1286	0.1290	0.0050	-0.0010	-0.0004	----|
31b	3_C8(2)	D	0.1286	0.1290	0.0050	-0.0010	-0.0004	----|
31b	3_C8(3)	D	0.1286	0.1290	0.0050	-0.0010	-0.0004	----|
31b	3_C8(4)	D	0.1286	0.1290	0.0050	-0.0010	-0.0004	----|
31b	3_C8(5)	D	0.1286	0.1290	0.0050	-0.0010	-0.0004	----|
31b	3_C8(6)	D	0.1288	0.1290	0.0050	-0.0010	-0.0002	---|
32b	3_B7(1)	X	-0.3729	-0.3800	0.0300	-0.0300	0.0071	|-
32b	3_B7(2)	X	-0.3729	-0.3800	0.0300	-0.0300	0.0071	|-
32b	3_B7(3)	X	-0.3729	-0.3800	0.0300	-0.0300	0.0071	|-
32b	3_B7(4)	X	-0.3729	-0.3800	0.0300	-0.0300	0.0071	|-
32b	3_B7(5)	X	-0.3728	-0.3800	0.0300	-0.0300	0.0072	|-
32b	3_B7(6)	X	-0.3726	-0.3800	0.0300	-0.0300	0.0074	|-
34	3_B7(1)	Y	0.9486	0.9500	0.0300	-0.0300	-0.0014	-|
34	3_B7(2)	Y	1.8985	1.9000	0.0300	-0.0300	-0.0015	-|
34	3_B7(3)	Y	2.8487	2.8500	0.0300	-0.0300	-0.0013	-|
34	3_B7(4)	Y	3.7986	3.8000	0.0300	-0.0300	-0.0014	-|
34	3_B7(5)	Y	4.7485	4.7500	0.0300	-0.0300	-0.0015	-|
34	3_B7(6)	Y	5.6987	5.7000	0.0300	-0.0300	-0.0013	-|
31c	3_C8	D	0.1287	0.1290	0.0050	-0.0010	-0.0003	----|
35	3_D7	X	-0.9978	-1.0000	0.0100	-0.0100	0.0022	|-
36a	3_B1	Y	-0.3086	-0.3100	0.0300	-0.0300	0.0014	|-
31d	3_C8(1)	D	0.1287	0.1290	0.0050	-0.0010	-0.0003	----|
31d	3_C8(2)	D	0.1286	0.1290	0.0050	-0.0010	-0.0004	----|
31d	3_C8(3)	D	0.1286	0.1290	0.0050	-0.0010	-0.0004	----|
31d	3_C8(4)	D	0.1286	0.1290	0.0050	-0.0010	-0.0004	----|
31d	3_C8(5)	D	0.1286	0.1290	0.0050	-0.0010	-0.0004	----|
31d	3_C8(6)	D	0.1285	0.1290	0.0050	-0.0010	-0.0005	----|
31d	3_C8(7)	D	0.1286	0.1290	0.0050	-0.0010	-0.0004	----|
31d	3_C8(8)	D	0.1286	0.1290	0.0050	-0.0010	-0.0004	----|
31d	3_C8(9)	D	0.1286	0.1290	0.0050	-0.0010	-0.0004	----|
37	3_D7(1)	X	-0.7501	-0.7500	0.0010	-0.0010	-0.0001	-|
37	3_D7(2)	X	-1.5001	-1.5000	0.0010	-0.0010	-0.0001	-|

Measurement Plan D4500 rev PB2 Date May 22, 2013 3

Part Number D4500-1 P Serial # 001 Time 1:36:45 pm

Feature		ID	Actual	Nominal	pos Tol	neg Tol	Diff	<--|-->
37	3_D7(3)	X	-2.2501	-2.2500	0.0010	-0.0010	-0.0001	-|
37	3_D7(4)	X	-3.0000	-3.0000	0.0010	-0.0010	0.0000	-|
37	3_D7(5)	X	-3.7500	-3.7500	0.0010	-0.0010	0.0000	-|
37	3_D7(6)	X	-4.5000	-4.5000	0.0010	-0.0010	0.0000	|-
37	3_D7(7)	X	-5.2499	-5.2500	0.0010	-0.0010	0.0001	|-
37	3_D7(8)	X	-5.9999	-6.0000	0.0010	-0.0010	0.0001	|-
37	3_D7(9)	X	-6.7499	-6.7500	0.0010	-0.0010	0.0001	|-
36b	3_B1(1)	Y	-0.3091	-0.3100	0.0300	-0.0300	0.0009	|-
36b	3_B1(2)	Y	-0.3097	-0.3105	0.0300	-0.0300	0.0009	|-
36b	3_B1(3)	Y	-0.3102	-0.3111	0.0300	-0.0300	0.0009	|-
36b	3_B1(4)	Y	-0.3107	-0.3116	0.0300	-0.0300	0.0010	|-
36b	3_B1(5)	Y	-0.3110	-0.3122	0.0300	-0.0300	0.0012	|-
36b	3_B1(6)	Y	-0.3114	-0.3127	0.0300	-0.0300	0.0013	|-
36b	3_B1(7)	Y	-0.3120	-0.3133	0.0300	-0.0300	0.0013	|-
36b	3_B1(8)	Y	-0.3124	-0.3138	0.0300	-0.0300	0.0014	|-
36b	3_B1(9)	Y	-0.3129	-0.3144	0.0300	-0.0300	0.0015	|-
31e	3_C8	D	0.1286	0.1290	0.0050	-0.0010	-0.0004	---|
38	3_C5	X	-0.4989	-0.4990	0.0100	-0.0100	0.0001	|-
36c	3_B1	Y	-0.3140	-0.3100	0.0300	-0.0300	-0.0040	-|
31f	3_C8(1)	D	0.1285	0.1290	0.0050	-0.0010	-0.0005	---|
31f	3_C8(2)	D	0.1286	0.1290	0.0050	-0.0010	-0.0004	---|
31f	3_C8(3)	D	0.1286	0.1290	0.0050	-0.0010	-0.0004	---|
31f	3_C8(4)	D	0.1286	0.1290	0.0050	-0.0010	-0.0004	---|
31f	3_C8(5)	D	0.1286	0.1290	0.0050	-0.0010	-0.0004	---|
31f	3_C8(6)	D	0.1285	0.1290	0.0050	-0.0010	-0.0005	---|
31f	3_C8(7)	D	0.1286	0.1290	0.0050	-0.0010	-0.0004	---|
31f	3_C8(8)	D	0.1286	0.1290	0.0050	-0.0010	-0.0004	---|
31f	3_C8(9)	D	0.1286	0.1290	0.0050	-0.0010	-0.0004	---|
31f	3_C8(10)	D	0.1286	0.1290	0.0050	-0.0010	-0.0004	---|
31f	3_C8(11)	D	0.1286	0.1290	0.0050	-0.0010	-0.0004	---|
31f	3_C8(12)	D	0.1286	0.1290	0.0050	-0.0010	-0.0004	---|
31f	3_C8(13)	D	0.1285	0.1290	0.0050	-0.0010	-0.0005	---|
31f	3_C8(14)	D	0.1286	0.1290	0.0050	-0.0010	-0.0004	---|
31f	3_C8(15)	D	0.1286	0.1290	0.0050	-0.0010	-0.0004	---|
31f	3_C8(16)	D	0.1287	0.1290	0.0050	-0.0010	-0.0003	---|
36d	3_B1(1)	Y	-0.3127	-0.3150	0.0300	-0.0300	0.0023	|-
36d	3_B1(2)	Y	-0.3126	-0.3155	0.0300	-0.0300	0.0029	|-
36d	3_B1(3)	Y	-0.3125	-0.3160	0.0300	-0.0300	0.0035	|-
36d	3_B1(4)	Y	-0.3124	-0.3164	0.0300	-0.0300	0.0040	|-
36d	3_B1(5)	Y	-0.3124	-0.3169	0.0300	-0.0300	0.0045	|-
36d	3_B1(6)	Y	-0.3123	-0.3174	0.0300	-0.0300	0.0050	|-
36d	3_B1(7)	Y	0.3122	-0.3179	0.0300	-0.0300	0.0056	|-
36d	3_B1(8)	Y	-0.3121	-0.3183	0.0300	-0.0300	0.0062	|-
36d	3_B1(9)	Y	-0.3121	-0.3188	0.0300	-0.0300	0.0067	|-
36d	3_B1(10)	Y	-0.3121	-0.3193	0.0300	-0.0300	0.0072	|-

Measurement Plan D4500 rev PB2 Date May 22, 2013 4

Part Number D4500-1 P Serial # 001 Time 1:36:45 pm

Wejay

Feature		ID	Actual	Nominal	pos Tol	neg Tol	Diff	<--|-->
36d	3_B1(11)	Y	-0.3120	-0.3198	0.0300	-0.0300	0.0078	|--
36d	3_B1(12)	Y	-0.3120	-0.3202	0.0300	-0.0300	0.0083	|--
36d	3_B1(13)	Y	-0.3120	-0.3207	0.0300	-0.0300	0.0087	|--
36d	3_B1(14)	Y	-0.3119	-0.3212	0.0300	-0.0300	0.0093	|--
36d	3_B1(15)	Y	-0.3117	-0.3217	0.0300	-0.0300	0.0100	|--
36d	3_B1(16)	Y	-0.3116	-0.3221	0.0300	-0.0300	0.0105	|--
39	3_C5(1)	X	-0.7609	-0.7600	0.0100	-0.0100	-0.0009	-|
39	3_C5(2)	X	-1.5210	-1.5200	0.0100	-0.0100	-0.0010	-|
39	3_C5(3)	X	-2.2810	-2.2800	0.0100	-0.0100	-0.0010	-|
39	3_C5(4)	X	-3.0409	-3.0400	0.0100	-0.0100	-0.0009	-|
39	3_C5(5)	X	-3.8010	-3.8000	0.0100	-0.0100	-0.0010	-|
39	3_C5(6)	X	-4.5610	-4.5600	0.0100	-0.0100	-0.0010	-|
39	3_C5(7)	X	-5.3209	-5.3200	0.0100	-0.0100	-0.0009	-|
39	3_C5(8)	X	-6.0810	-6.0800	0.0100	-0.0100	-0.0010	-|
39	3_C5(9)	X	-6.8410	-6.8400	0.0100	-0.0100	-0.0010	-|
39	3_C5(10)	X	-7.6009	-7.6000	0.0100	-0.0100	-0.0009	-|
39	3_C5(11)	X	-8.3609	-8.3600	0.0100	-0.0100	-0.0009	-|
39	3_C5(12)	X	-9.1209	-9.1200	0.0100	-0.0100	-0.0009	-|
39	3_C5(13)	X	-9.8808	-9.8800	0.0100	-0.0100	-0.0008	-|
39	3_C5(14)	X	-10.6407	-10.6400	0.0100	-0.0100	-0.0007	-|
39	3_C5(15)	X	-11.4006	-11.4000	0.0100	-0.0100	-0.0006	-|
39	3_C5(16)	X	-12.1606	-12.1600	0.0100	-0.0100	-0.0006	-|
31g	3_C8	D	0.1286	0.1290	0.0050	-0.0010	-0.0004	—|
36e	3_B1	X	0.3046	0.3100	0.0300	-0.0300	-0.0054	-|
40	3_B1	Y	0.3094	0.3100	0.0300	-0.0300	-0.0006	-|
31h	3_C8(1)	D	0.1286	0.1290	0.0050	-0.0010	-0.0004	—|
31h	3_C8(2)	D	0.1286	0.1290	0.0050	-0.0010	-0.0004	—|
31h	3_C8(3)	D	0.1286	0.1290	0.0050	-0.0010	-0.0004	—|
31h	3_C8(4)	D	0.1286	0.1290	0.0050	-0.0010	-0.0004	—|
31h	3_C8(5)	D	0.1286	0.1290	0.0050	-0.0010	-0.0004	—|
36f	3_C8(1)	X	0.3053	0.3100	0.0300	-0.0300	-0.0047	-|
36f	3_C8(2)	X	0.3062	0.3100	0.0300	-0.0300	-0.0038	-|
36f	3_C8(3)	X	0.3067	0.3100	0.0300	-0.0300	-0.0033	-|
36f	3_C8(4)	X	0.3074	0.3100	0.0300	-0.0300	-0.0026	-|
36f	3_C8(5)	X	0.3078	0.3100	0.0300	-0.0300	-0.0022	-|
41	3_B1(1)	Y	0.7505	0.7500	0.0100	-0.0100	0.0005	|-
41	3_B1(2)	Y	1.5005	1.5000	0.0100	-0.0100	0.0005	|-
41	3_B1(3)	Y	2.2507	2.2500	0.0100	-0.0100	0.0007	|-
41	3_B1(4)	Y	3.0009	3.0000	0.0100	-0.0100	0.0009	|-
41	3_B1(5)	Y	3.7510	3.7500	0.0100	-0.0100	0.0010	|-
31i	3_C8	D	0.1286	0.1290	0.0100	-0.0100	-0.0004	-|
36g	3_B1	X	0.3138	0.3100	0.0300	-0.0300	0.0038	|-
42	3_C1	Y	0.7410	0.7420	0.0100	-0.0100	-0.0010	-|
31j	3_C8	D	0.1291	0.1290	0.0100	-0.0100	0.0001	|-
36h	3_B1	X	0.3138	0.3100	0.0300	-0.0300	0.0038	|-

Measurement Plan D4500 rev PB2 Date May 22, 2013 5

Part Number D4500-1 P Serial # 001 Time 1:36:45 pm

Wejay

Feature		ID	Actual	Nominal	pos Tol	neg Tol	Diff	<--|-->
43a	3_C1	Y	0.6253	0.6250	0.0100	-0.0100	0.0003	|-
31k	3_C8	D	0.1291	0.1290	0.0100	-0.0100	0.0001	|-
36i	3_B1	X	0.3130	0.3100	0.0300	-0.0300	0.0030	|-
43b	3_C1	Y	0.6246	0.6250	0.0100	-0.0100	-0.0004	-|
31L	3_C8	D	0.1287	0.1290	0.0050	-0.0010	-0.0003	---|
44a	3_B7	X	0.3170	0.3100	0.0300	-0.0300	0.0070	|-
45	3_B6	Y	0.3779	0.3800	0.0300	-0.0300	-0.0021	-|
31m	3_C8	D	0.1286	0.1290	0.0050	-0.0010	-0.0004	---|
46	3_B6	Y	2.0985	2.1000	0.0300	-0.0300	-0.0015	-|
44b	3_B7_R	Dist	0.3156	0.3100	0.0300	-0.0300	0.0056	|-
31n	3_C8	D	0.1286	0.1290	0.0050	-0.0010	-0.0004	---|
47	3_B6	Y	2.8610	2.8600	0.0300	-0.0300	0.0010	|-
44c	3_B7_R	Dist	0.3155	0.3100	0.0300	-0.0300	0.0055	|-
31o	3_C8	D	0.1286	0.1290	0.0050	-0.0010	-0.0004	---|
48	3_B6	Y	4.3427	4.3400	0.0300	-0.0300	0.0027	|-
44d	3_B7_R	Dist	0.3138	0.3100	0.0300	-0.0300	0.0038	|-
31p	3_C8	D	0.1285	0.1290	0.0050	-0.0010	-0.0005	---|
49	3_B6	X	-3.5650	-3.5700	0.0300	-0.0300	0.0050	|-
44f	3_B7	Y	0.3116	0.3100	0.0300	-0.0300	0.0016	|-
31q	3_C8	D	0.1286	0.1290	0.0050	-0.0010	-0.0004	---|
50	3_B6	X	-4.0024	-4.0000	0.0300	-0.0300	-0.0024	-|
44g	3_B7	Y	0.3089	0.3100	0.0300	-0.0300	-0.0011	-|
31r	3_C8(1)	D	0.1285	0.1290	0.0050	-0.0010	-0.0005	---|
31r	3_C8(2)	D	0.1285	0.1290	0.0050	-0.0010	-0.0005	---|
51a	3_C5(1)	X	-1.0001	-1.0000	0.0300	-0.0300	-0.0001	-|
51a	3_C5(2)	X	-2.0002	-2.0000	0.0300	-0.0300	-0.0002	-|
44h	3_B7(1)	Y	0.3091	0.3100	0.0300	-0.0300	-0.0009	-|
44h	3_B7(2)	Y	0.3093	0.3100	0.0300	-0.0300	-0.0007	-|
31rr	3_C8	D	0.1286	0.1290	0.0050	-0.0010	-0.0004	---|
52	3_C5_X	Dist	1.9995	2.0000	0.0100	-0.0100	-0.0005	-|
44hh	3_B7	Y	0.3095	0.3100	0.0300	-0.0300	-0.0005	-|
31s	3_C8(1)	D	0.1285	0.1290	0.0050	-0.0010	-0.0005	---|
31s	3_C8(2)	D	0.1285	0.1290	0.0050	-0.0010	-0.0005	---|
31s	3_C8(3)	D	0.1286	0.1290	0.0050	-0.0010	-0.0004	---|
53	3_B5	X	-12.9294	-12.9300	0.0300	-0.0300	0.0006	|-
51b	3_C5(1)	X	-1.0002	-1.0000	0.0300	-0.0300	-0.0002	-|
51b	3_C5(2)	X	-2.0003	-2.0000	0.0300	-0.0300	-0.0003	-|
51b	3_C5(3)	X	-3.0003	-3.0000	0.0300	-0.0300	-0.0003	-|
44i	3_B7(1)	Y	0.3095	0.3100	0.0300	-0.0300	-0.0005	-|
44i	3_B7(2)	Y	0.3097	0.3100	0.0300	-0.0300	-0.0003	-|
44i	3_B7(3)	Y	0.3097	0.3100	0.0300	-0.0300	-0.0003	-|
31t	3_C8	D	0.1286	0.1290	0.0300	-0.0300	-0.0004	-|
44j	3_B7	CartDist	0.3073	0.3100	0.0300	-0.0300	-0.0027	-|
31u	3_C9(1)	D	0.1286	0.1290	0.0050	-0.0010	-0.0004	---|
31u	3_C9(2)	D	0.1286	0.1290	0.0050	-0.0010	-0.0004	---|

Measurement Plan D4500 rev PB2 Date May 22, 2013 6

Part Number D4500-1 P Serial # 001 Time 1:36:45 pm

Wejay

Feature		ID	Actual	Nominal	pos Tol	neg Tol	Diff	<--|-->
31u	3_C9(3)	D	0.1286	0.1290	0.0050	-0.0010	-0.0004	----|
31u	3_C9(4)	D	0.1286	0.1290	0.0050	-0.0010	-0.0004	----|
31u	3_C9(5)	D	0.1286	0.1290	0.0050	-0.0010	-0.0004	----|
54	3_C3(1)	X	-0.8750	-0.8750	0.0300	-0.0300	0.0000	|
54	3_C3(2)	X	-1.7502	-1.7500	0.0300	-0.0300	-0.0002	-|
54	3_C3(3)	X	-2.6253	-2.6250	0.0300	-0.0300	-0.0003	-|
54	3_C3(4)	X	-3.5004	-3.5000	0.0300	-0.0300	-0.0004	-|
54	3_C3(5)	X	-4.3755	-4.3750	0.0300	-0.0300	-0.0005	-|
44k	3_B7(1)	Y	0.3082	0.3100	0.0300	-0.0300	-0.0018	-|
44k	3_B7(2)	Y	0.3083	0.3100	0.0300	-0.0300	-0.0017	-|
44k	3_B7(3)	Y	0.3082	0.3100	0.0300	-0.0300	-0.0018	-|
44k	3_B7(4)	Y	0.3081	0.3100	0.0300	-0.0300	-0.0019	-|
44k	3_B7(5)	Y	0.3082	0.3100	0.0300	-0.0300	-0.0018	-|
31v	3_C8	D	0.1286	0.1290	0.0050	-0.0010	-0.0004	----|
44m	3_B7	X	-0.3093	-0.3100	0.0300	-0.0300	0.0007	|-
55	3_B2	Y	0.4992	0.5000	0.0050	-0.0010	-0.0008	----|
56a	4_A6	D	0.2037	0.2010	0.0050	-0.0010	0.0027	|-
57	4_C3	Y	1.1286	1.1300	0.0300	-0.0300	-0.0014	-|
58a	4_B3	X	0.3133	0.3100	0.0300	-0.0300	0.0033	|-
59a1	4_A5	D	0.0980	0.0980	0.0040	-0.0010	0.0000	---|
60a	4_A5	Y	0.3448	-0.3440	0.0100	-0.0100	-0.0008	-|
59a2	4_A5	D	0.0980	0.0980	0.0040	-0.0010	0.0000	---|
61a	4_A5_Y	Dist	0.6875	0.6880	0.0100	-0.0100	-0.0005	-|
56b	4_A6	D	0.2034	0.2010	0.0050	-0.0010	0.0024	|-
58b1	4_B3_3d	Dist	0.3040	0.3100	0.0300	-0.0300	-0.0060	-|
58b2	4_B3_3d	Dist	0.3029	0.3100	0.0300	-0.0300	-0.0071	-|
62	4_C3	Y	3.7121	3.7100	0.0300	-0.0300	0.0021	|-
59b1	4_A5	D	0.0980	0.0980	0.0040	-0.0010	0.0000	---|
60b	4_A5	Y	-0.3474	-0.3440	0.0100	-0.0100	-0.0034	--|
59b2	4_A5	D	0.0980	0.0980	0.0040	-0.0010	0.0000	---|
61b	4_A5_R	Dist	0.6878	0.6880	0.0100	-0.0100	-0.0002	-|
56c	4_A6	D	0.2043	0.2010	0.0050	-0.0010	0.0033	|--
58c	4_B3	Y	0.3128	0.3100	0.0300	-0.0300	0.0028	|-
63	4_B3	X	-2.7527	-2.7500	0.0300	-0.0300	-0.0027	-|
59c1	4_A5	D	0.0980	0.0980	0.0040	-0.0010	0.0000	---|
60c	4_A5	X	-0.3397	-0.3440	0.0100	-0.0100	0.0043	|--
59c2	4_A5	D	0.0980	0.0980	0.0040	-0.0010	0.0000	---|
61c	4_A5_X	Dist	0.6878	0.6880	0.0100	-0.0100	-0.0002	-|
56d	4_A6	D	0.2037	0.2010	0.0050	-0.0010	0.0027	|-
58d	4_B3	Y	0.3099	0.3100	0.0300	-0.0300	-0.0001	-|
64	4_B3	X	-7.0059	-7.0000	0.0100	-0.0100	-0.0059	---|
59d1	4_A5	D	0.0980	0.0980	0.0040	-0.0010	0.0000	---|
60d	4_A5	X	-0.3407	-0.3440	0.0100	-0.0100	0.0033	|--
59d2	4_A5	D	0.0981	0.0980	0.0040	-0.0010	0.0001	---|
61d	4_A5_Y	Dist	0.6881	0.6880	0.0100	-0.0100	0.0001	|-

Measurement Plan D4500 rev PB2 Date May 22, 2013 7

Part Number D4500-1 P Serial # 001 Time 1:36:45 pm

Wejay

Feature		ID	Actual	Nominal	pos Tol	neg Tol	Diff	<--|-->
56e	4_A6	D	0.2038	0.2010	0.0050	-0.0010	0.0028	|--
58e	4_B3	Y	0.3103	0.3100	0.0300	-0.0300	0.0003	|-
65	4_B4	X	-12.0062	-12.0000	0.0100	-0.0100	-0.0062	---|
59e1	4_A5	D	0.0980	0.0980	0.0040	-0.0010	0.0000	---|
60e	4_A5	X	-0.3405	-0.3440	0.0100	-0.0100	0.0035	|--
59e2	4_A5	D	0.0980	0.0980	0.0040	-0.0010	0.0000	---|
61e	4_A5_X	Dist	0.6878	0.6880	0.0100	-0.0100	-0.0002	-|
56f	4_A6	D	0.2043	0.2010	0.0050	-0.0010	0.0033	|--
66	4_B5	X	-17.0969	-17.0900	0.0100	-0.0100	-0.0069	---|
67	4_B3	Y	1.3270	1.3100	0.0300	-0.0300	0.0170	|---
59f1	4_A5	D	0.0979	0.0980	0.0040	-0.0010	-0.0001	---|
60f	4_A7	X	-0.3418	-0.3440	0.0100	-0.0100	0.0022	|-
59f2	4_A5	D	0.0980	0.0980	0.0040	-0.0010	0.0000	---|
61f	4_A5_R	Dist	0.6880	0.6880	0.0100	-0.0100	0.0000	|-

Manually Inspected Dims

67	2_B6	.125 typ. wall thickness	.1225/.1255
68	2_A5	.125 typ. flange thk	.123/.134
69	2_B2	R.06	R.06 TYP.
70	2_B2	R.16	R.16 TYP.
71	2_D6	2.87 dim	2.869
72	2_C7	1.85 dim	1.845
73	2_C7	1.14 dim	1.135
74	2_C6	135 deg angle	135°
75	2_D4	18.62 dim	18.622
76	2_D1	1.43 dim	1.425
77	2_C1	0.83 dim	.825
78	2_C2	143 deg angle	143°
79	2_D2	R0.12 typ	R.125 TYP.
80	3_C8	CSK .220 dia x 100 deg	.218/.220 x 100°
81	3_D1	CSK .220 dia x 100 deg	.218/.220 x 100°
82	3_A5	0.062 dim typ.	.062/.066
83	3_A5	R0.063 typ.	.063 TYP.
84	4_C4	CSK .170 dia x 100 deg	.170/.172 x 100°
85	4_A5	CSK .120 dia x 100 deg	.120/.125 x 100°
86	1_A8	Break sharp edges .005-.010max	O.K.

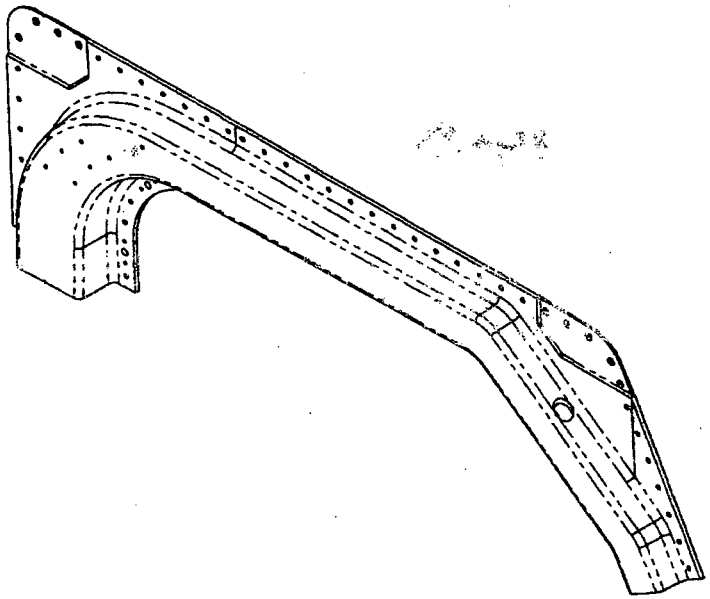

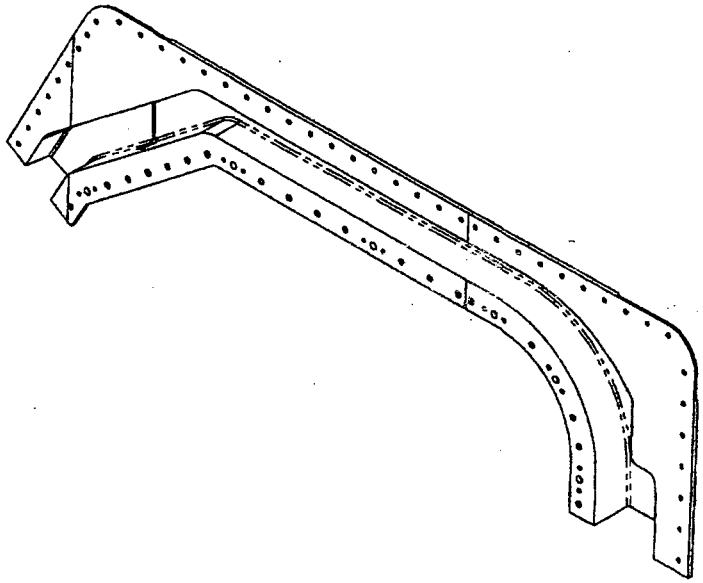

D4500-1 BELL DOOR HEADER (LH)

RELEASED
2013 -01- 10

NOTES:
1) MATERIAL: 6061-T6/T651/T6510/T6511/T62 ALUMINUM BAR
PER QQ-A-225/8 OR AMS-QQ-A-225/8
(OR AMS 4117/4128/4115/4116)
OR QQ-A-200/8 OR AMS-QQ-A-200/8 (OR AMS 4160)
OR ASTM B211 OR ASTM B221
REF DART SPEC M6061T6B
2) FINISH: CHEMICAL CONVERSION COAT PER DART QSI 005 4.1
PRIME TEMPO GREY (4.2.1.3.2) PER DART QSI 005 4.2
3) TOLERANCES: PER DART QSI 018 UNLESS OTHERWISE NOTED
4) UNITS: INCHES UNLESS OTHERWISE NOTED
5) BREAK SHARP EDGES: 0.005 TO 0.010 MAX
6) IDENTIFICATION: N/A
7) WEIGHT: 1.78 lbs
8) RAW MATERIAL SURFACE FINISH SUFFICIENT FOR THIS PART
(NOT NECESSARY TO FACE MATERIAL).
9) ALL NON DIMENSIONED FEATURES PER CAD FILE "D4500-1-REVD.STP"

REV.	DESCRIPTION	BY	DATE
D	SEE SHT 2 ZONE C8 POCKET ADDED TO AFT AREA OF FLANGE SIMILAR TO THE POCKET ON THE FWD AREA OF THE FLANGE. DONE TO FACILITATE OPERATION OF DOOR MECHANISM SAME POCKET ADDED TO -2 PART.	AJS	12.12.03
C	ADDED -2 (RH CONFIGURATION). B8-3 0.98 DIM TYP OUTSIDE PATTERN NOTE DELETED (DRAFTING ERROR). C4-4 Φ0.129 THRU WAS Φ0.225 (DRAFTING ERROR) CSK WAS 0.170. SEE DETAIL C Φ0.201 HOLE WAS Φ0.194 (EXPANDED FOR FLOATING NUTPLATE).	AJS	12.10.10
B	COMPLETE REDESIGN.	AJS	12.09.11
A	NEW ISSUE	AJS	12.03.02

DESIGN	AJS	DART AEROSPACE LTD HAWKESBURY, ONTARIO, CANADA	
DRAWN	AJS		
CHECKED	AP	DRAWING NO. D4500	REV. D SHEET 1 OF 8
MFG. APPR.			
APPROVED		TITLE BELL DOOR HEADER	SCALE - NTS
DE APPR.			
DATE	12.12.03		

COPYRIGHT © 2012 BY DART AEROSPACE LTD
THIS DOCUMENT IS FIRM BLAKE CONFIDENTIAL AND IS SUPPLIED ON THE EXPRESS CONDITION THAT IT IS NOT TO BE USED FOR ANY PURPOSE OR COPIED OR COMMUNICATED TO ANY OTHER PERSON WITHOUT WRITTEN PERMISSION FROM DART AEROSPACE LTD.

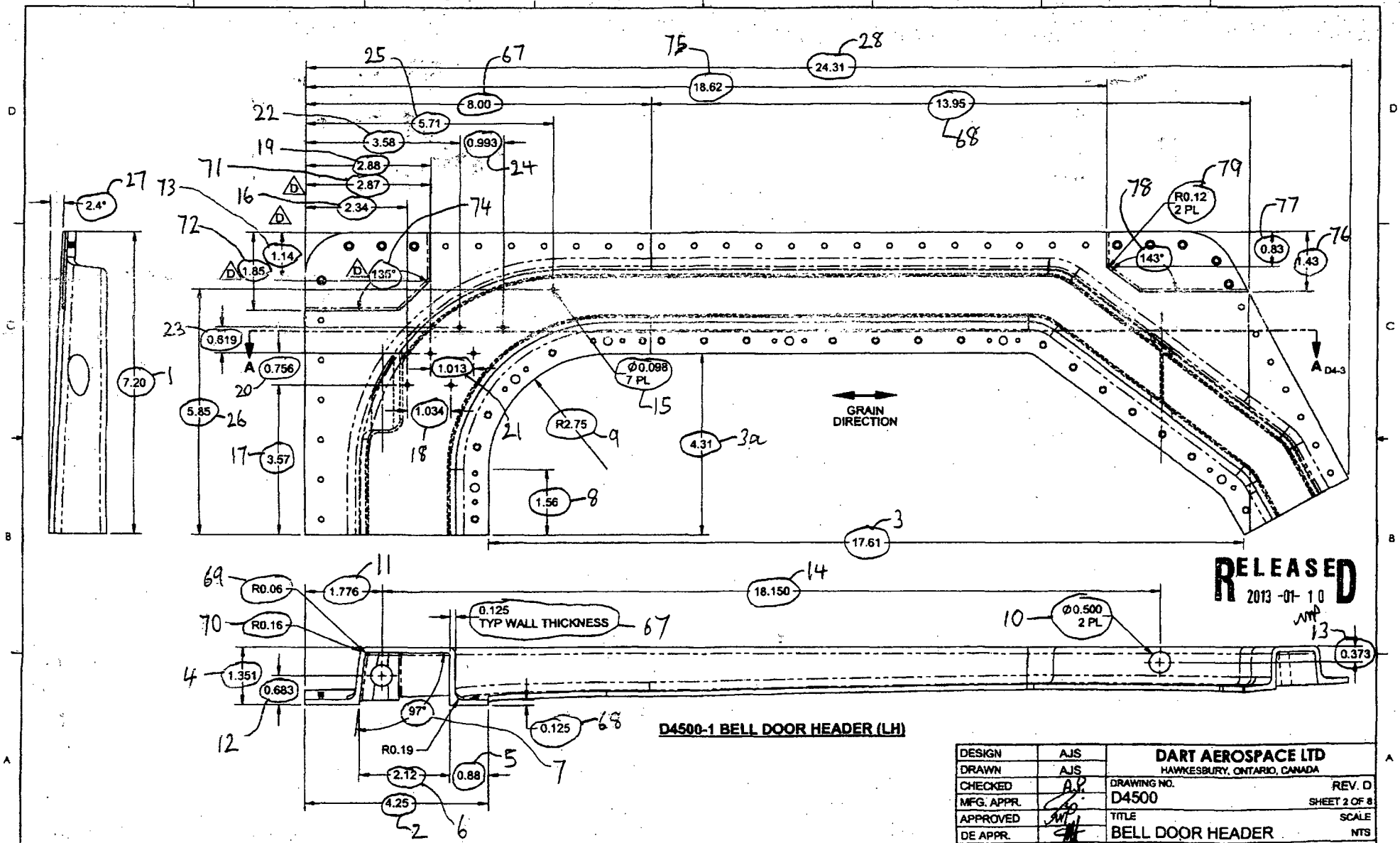

D4500-1 BELL DOOR HEADER (LH)

DESIGN	AJS	DART AEROSPACE LTD HAWKESBURY, ONTARIO, CANADA
DRAWN	AJS	
CHECKED		DRAWING NO. D4500 — REV. D — SHEET 2 OF 8
MFG. APPR.		
APPROVED		TITLE: BELL DOOR HEADER — SCALE: NTS
DE APPR.		
DATE	12.12.03	

COPYRIGHT © 2013 BY DART AEROSPACE LTD
THIS DOCUMENT IS PRIVATE AND CONFIDENTIAL AND IS SUPPLIED ON THE EXPRESS CONDITION THAT IT IS NOT TO BE USED FOR ANY PURPOSE OR COPIED OR COMMUNICATED TO ANY OTHER PERSON WITHOUT WRITTEN PERMISSION FROM DART AEROSPACE LTD.

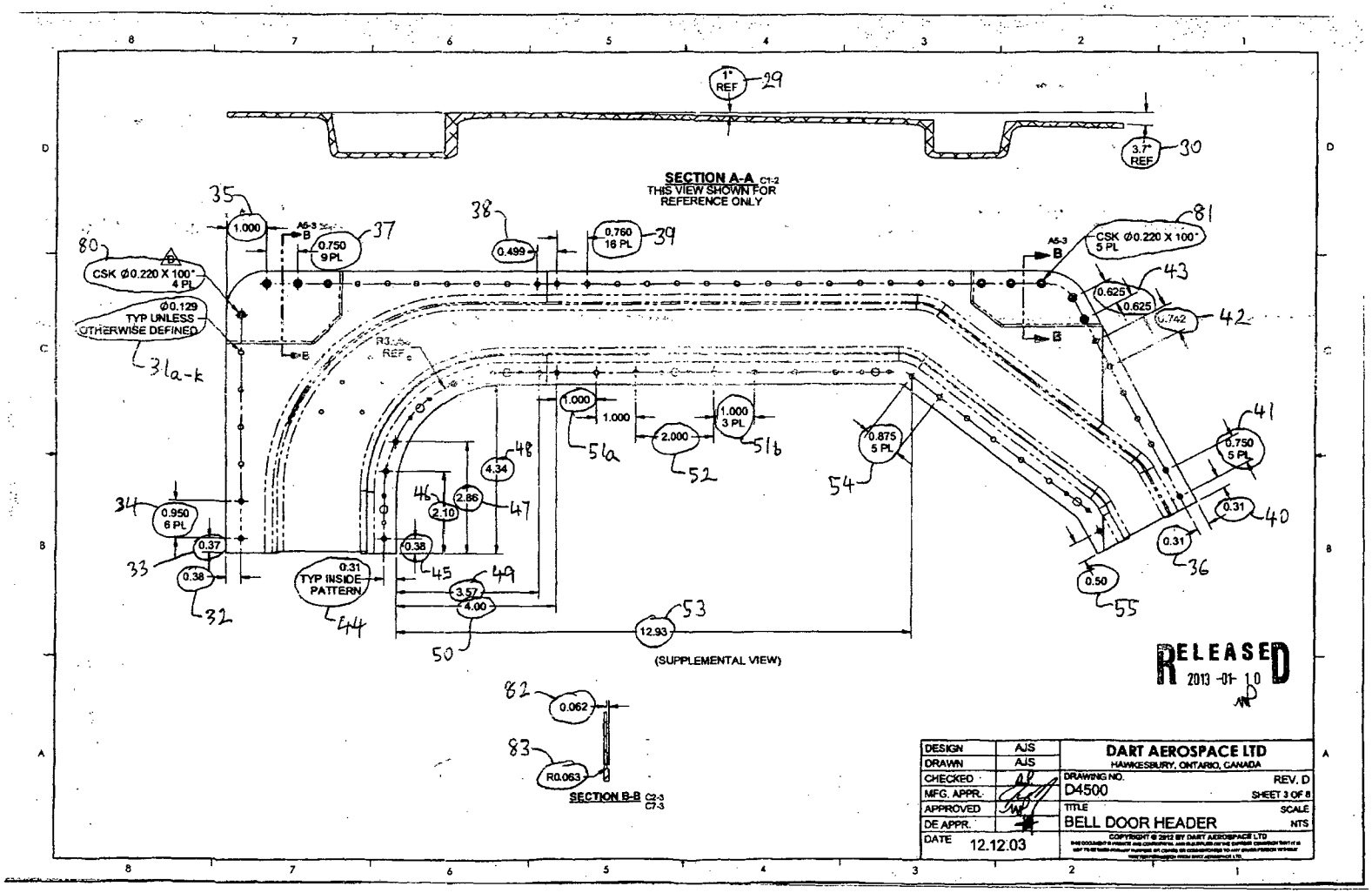
SECTION A-A C1-2
THIS VIEW SHOWN FOR REFERENCE ONLY
1° REF
29
3.7° REF
30
35
1.000
A5-3
B
0.750 9 PL
37
38
0.499
0.760 18 PL
39
80
CSK Ø0.220 X 100° 4 PL
Ø0.129 TYP UNLESS OTHERWISE DEFINED
31a-k
R3.00 REF
81
CSK Ø0.220 X 100° 5 PL
43
0.625
0.625
0.742
42
1.000
1.000
51a
2.000
52
1.000 3 PL
51b
0.875 5 PL
54
41
0.750 5 PL
40
0.31
36
0.31
0.50
55
48
4.34
46
2.10
2.86
47
34
0.950 6 PL
0.37
33
0.38
32
0.31 TYP INSIDE PATTERN
44
0.38
45
49
3.57
4.00
50
12.93
53
(SUPPLEMENTAL VIEW)
82
0.062
83
R0.063
SECTION B-B C2-3 C7-3
RELEASED
2013 -01- 10
DESIGN AJS
DRAWN AJS
CHECKED
MFG. APPR.
APPROVED
DE APPR.
DATE 12.12.03
DART AEROSPACE LTD
HAWKESBURY, ONTARIO, CANADA
DRAWING NO. D4500
REV. D
SHEET 3 OF 8
TITLE BELL DOOR HEADER
SCALE NTS
COPYRIGHT © 2012 BY DART AEROSPACE LTD

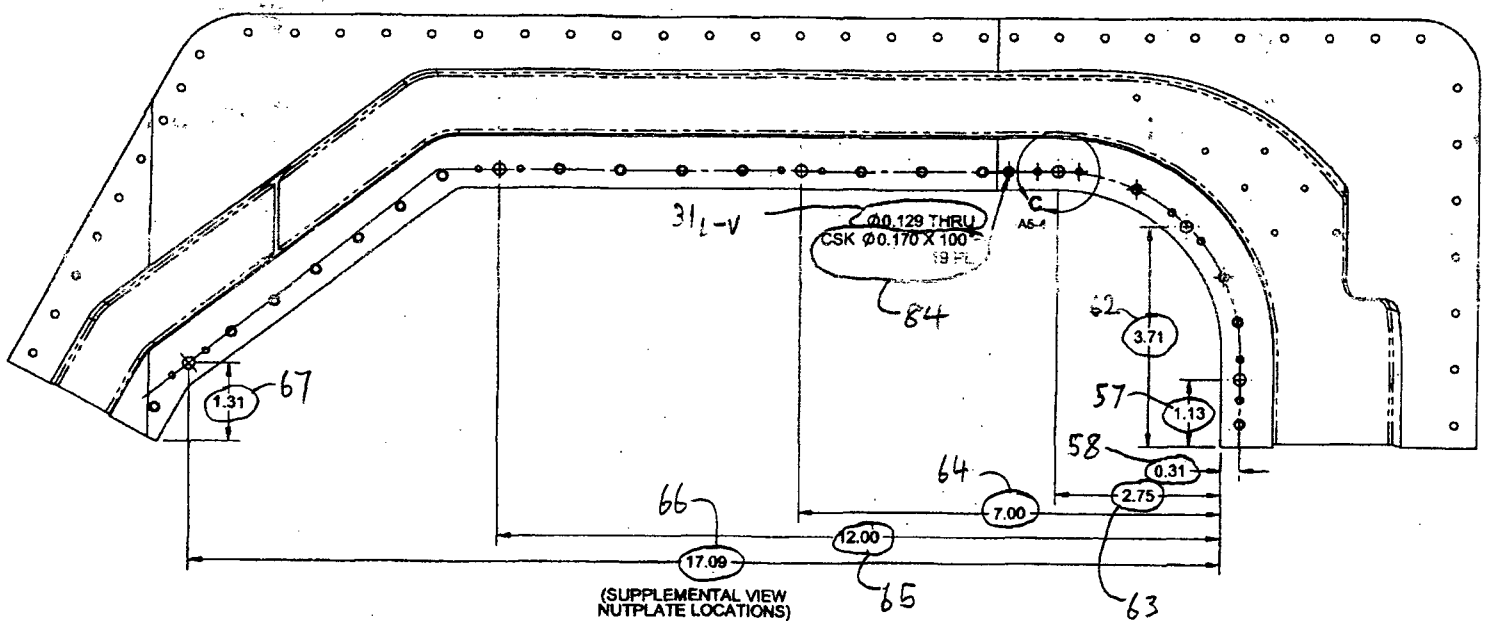

(SUPPLEMENTAL VIEW
NUTPLATE LOCATIONS)

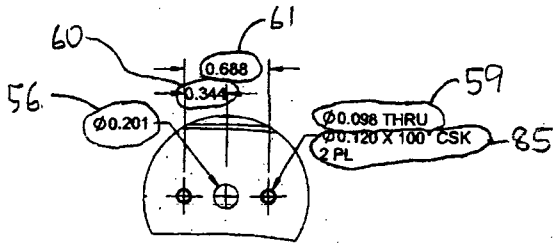

DETAIL C C3-4
NUTPLATE HOLE DETAIL 6 PL
SCALE 2X

RELEASED
2013 -01- 10

DESIGN	AJS	**DART AEROSPACE LTD** HAWKESBURY, ONTARIO, CANADA
DRAWN	AJS	
CHECKED		DRAWING NO. D4500 — REV. D — SHEET 4 OF 8
MFG. APPR.		
APPROVED		TITLE: BELL DOOR HEADER — SCALE: NTS
DE APPR.		
DATE	12.12.03	

COPYRIGHT © 2012 BY DART AEROSPACE LTD

Wejay
MACHINE PRODUCTS CO. LTD.

600 O'CONNOR DRIVE, KINGSTON, ONTARIO K7P 1N3 PHONE: (613) 384-1662 FAX: (613) 384-2997

CERTIFICATE OF COMPLIANCE

CUSTOMER: Dart Aerospace Ltd.	**DATE:** May 23 2013
	P.O.# PO19474
	WEJAY JOB# 36234

I hereby certify that the following material has been inspected/tested and conforms to the requirements and specifications as stated in your contract and as noted below. Any exceptions will be listed as NCR items.

PART NO.	QTY.	PROCESS (ES)	SPECIFICATION / REV
D4500-1P 'Bell Door Header (LH)'	5	Machined complete per drawing req'ts.	D4500 / rev. D

Note: 1) Material supplied by 'Dart Aerospace'

Records of Inspection/Test will be retained for 5 years minimum.

Yours truly,

WMP 03

Clifford Smith
Authorized Q.A. Signatory

Measurement Plan	D4500 rev PB2	Date	May 22, 2013	Time 1:36:45 pm	1
Customer	Dart Aerospace Ltd.	Customer P.O.	P017497		
Drawing #	D4500	Drawing rev	D		
Part Number	D4500-1 P	E.C.O.	--		
Part Name	Bell Door Header (LH)	Material	Alum. Alloy 6061-T6511		
Serial #	001	Inspected by	Cliff Smith		
Job #	36234	Signature:	WMP 03 ACCEPTED		

Wejay MACHINE PRODUCTS CO. LTD.

ZEISS

Overall Result

All Characteristics:	299
Out of tolerance:	0
Over Warning Limit:	0
Not Calculated:	0

Comment: Note: Material supplied by DART Aerospace Ltd

1ST ARTICLE

Feature		ID	Actual	Nominal	Pos Tol.	Neg Tol.	Deviation	<--|-->
1	2_C8	Y	-7.1988	-7.2000	0.0300	-0.0300	0.0012	|-
Inside bott. face_flat		GDT Flat	0.0017	0.0000	0.0100		0.0017	|-
2	2_A6	X	-4.2469	-4.2500	0.0300	-0.0300	0.0031	|-
3	2_B3_X	Dist	17.6122	17.6100	0.0300	-0.0300	0.0022	|-
3a	2_B4	CartDist	4.3135	4.3100	0.0300	-0.0300	0.0035	|-
4	2_A7	Z	1.3528	1.3510	0.0100	-0.0100	0.0018	|-
5	2_A6_X	Dist	0.8790	0.8800	0.0300	-0.0300	-0.0010	-|
6	2_A6_X	Dist	2.1210	2.1200	0.0300	-0.0300	0.0010	|-
7	2_A6	A	96.9475	97.0000	0.5000	-0.5000	-0.0525	-|
8	2_B5_Y	Dist	1.5649	1.5600	0.0300	-0.0300	0.0049	|-
9	2_C5	R	2.7512	2.7500	0.0300	-0.0300	0.0012	|-
10a	2_B2	D	0.5000	0.5000	0.0060	-0.0010	0.0000	---|
10b	2_B2	D	0.5004	0.5000	0.0060	-0.0010	0.0004	---|
11	2_B7	X	-1.7725	-1.7760	0.0100	-0.0100	0.0035	|--
12	2_A7	Z	-0.6832	-0.6830	0.0100	-0.0100	-0.0002	-|
13	2_B1	Z	0.3727	0.3730	0.0100	-0.0100	-0.0003	-|
14	2_B4	X	-18.1519	-18.1500	0.0100	-0.0100	-0.0019	-|
15a	2_C5	D	0.0977	0.0980	0.0040	-0.0010	-0.0003	---|
16	2_D7	X	-2.3398	-2.3400	0.0300	-0.0300	0.0002	|-
17a	2_B7	Y	3.5706	3.5700	0.0300	-0.0300	0.0006	|-
15b	2_C5	D	0.0978	0.0980	0.0040	-0.0010	-0.0002	---|
17b	2_B7	Y	3.5709	3.5700	0.0300	-0.0300	0.0009	|-
18	2_C6_X	Dist	1.0345	1.0340	0.0100	-0.0100	0.0005	|-
15c	2_C5	D	0.0977	0.0980	0.0040	-0.0010	-0.0003	---|
19	2_D6	X	-2.8807	-2.8800	0.0300	-0.0300	-0.0007	-|
20a	2_C7_Y	Dist	0.7568	0.7560	0.0100	-0.0100	0.0008	|-
15d	2_C5	D	0.0980	0.0980	0.0040	-0.0010	0.0000	---|
20b	2_C7_Y	Dist	0.7569	0.7560	0.0100	-0.0100	0.0009	|-
21	2_C6_X	Dist	1.0136	1.0130	0.0100	-0.0100	0.0006	|-
15e	2_C5	D	0.0977	0.0980	0.0040	-0.0010	-0.0003	---|
22	2_D6	X	-3.5748	-3.5800	0.0300	-0.0300	0.0052	|-
23a	2_C7_Y	Dist	0.6189	0.6190	0.0100	-0.0100	-0.0001	-|

Measurement Plan D4500 rev PB2 Date May 22, 2013 2

Part Number D4500-1 P Serial # 001 Time 1:36:45 pm

Wejay

Feature		ID	Actual	Nominal	pos Tol	neg Tol	Diff	<--|-->
15f	2_C5	D	0.0978	0.0980	0.0040	-0.0010	-0.0002	---|
23b	2_C7_Y	Dist	0.6191	0.6190	0.0100	-0.0100	0.0001	|-
24	2_D6_X	Dist	0.9929	0.9930	0.0100	-0.0100	-0.0001	-|
15g	2_C5	D	0.0979	0.0980	0.0040	-0.0010	-0.0001	---|
25	2_D6	X	-5.7095	-5.7100	0.0300	-0.0300	0.0005	|-
26	2_C7	Y	5.8463	5.8500	0.0300	-0.0300	-0.0037	-|
27	2_D8	A2	2.3697	2.4000	0.5000	-0.5000	-0.0303	-|
28	2_D4	X	-24.3040	-24.3100	0.0300	-0.0300	0.0060	|-
29	3_D4	A1	-1.0108	-1.0000	0.5000	-0.5000	-0.0108	-|
30	3_D1	A1	-3.7480	-3.7000	0.5000	-0.5000	-0.0480	-|
31a	3_C8	D	0.1285	0.1290	0.0050	-0.0010	-0.0005	----|
32a	3_B7	X	-0.3718	-0.3800	0.0300	-0.0300	0.0082	|--
33	3_B7	Y	0.3728	0.3700	0.0300	-0.0300	0.0028	|-
31b	3_C8(1)	D	0.1286	0.1290	0.0050	-0.0010	-0.0004	----|
31b	3_C8(2)	D	0.1286	0.1290	0.0050	-0.0010	-0.0004	----|
31b	3_C8(3)	D	0.1286	0.1290	0.0050	-0.0010	-0.0004	----|
31b	3_C8(4)	D	0.1286	0.1290	0.0050	-0.0010	-0.0004	----|
31b	3_C8(5)	D	0.1286	0.1290	0.0050	-0.0010	-0.0004	----|
31b	3_C8(6)	D	0.1288	0.1290	0.0050	-0.0010	-0.0002	---|
32b	3_B7(1)	X	-0.3729	-0.3800	0.0300	-0.0300	0.0071	|-
32b	3_B7(2)	X	-0.3729	-0.3800	0.0300	-0.0300	0.0071	|-
32b	3_B7(3)	X	-0.3729	-0.3800	0.0300	-0.0300	0.0071	|-
32b	3_B7(4)	X	-0.3729	-0.3800	0.0300	-0.0300	0.0071	|-
32b	3_B7(5)	X	-0.3728	-0.3800	0.0300	-0.0300	0.0072	|-
32b	3_B7(6)	X	-0.3726	-0.3800	0.0300	-0.0300	0.0074	|-
34	3_B7(1)	Y	0.9486	0.9500	0.0300	-0.0300	-0.0014	-|
34	3_B7(2)	Y	1.8985	1.9000	0.0300	-0.0300	-0.0015	-|
34	3_B7(3)	Y	2.8487	2.8500	0.0300	-0.0300	-0.0013	-|
34	3_B7(4)	Y	3.7986	3.8000	0.0300	-0.0300	-0.0014	-|
34	3_B7(5)	Y	4.7485	4.7500	0.0300	-0.0300	-0.0015	-|
34	3_B7(6)	Y	5.6987	5.7000	0.0300	-0.0300	-0.0013	-|
31c	3_C8	D	0.1287	0.1290	0.0050	-0.0010	-0.0003	----|
35	3_D7	X	-0.9978	-1.0000	0.0100	-0.0100	0.0022	|-
36a	3_B1	Y	-0.3086	-0.3100	0.0300	-0.0300	0.0014	|-
31d	3_C8(1)	D	0.1287	0.1290	0.0050	-0.0010	-0.0003	----|
31d	3_C8(2)	D	0.1286	0.1290	0.0050	-0.0010	-0.0004	----|
31d	3_C8(3)	D	0.1286	0.1290	0.0050	-0.0010	-0.0004	----|
31d	3_C8(4)	D	0.1286	0.1290	0.0050	-0.0010	-0.0004	----|
31d	3_C8(5)	D	0.1286	0.1290	0.0050	-0.0010	-0.0004	----|
31d	3_C8(6)	D	0.1285	0.1290	0.0050	-0.0010	-0.0005	----|
31d	3_C8(7)	D	0.1286	0.1290	0.0050	-0.0010	-0.0004	----|
31d	3_C8(8)	D	0.1286	0.1290	0.0050	-0.0010	-0.0004	----|
31d	3_C8(9)	D	0.1286	0.1290	0.0050	-0.0010	-0.0004	----|
37	3_D7(1)	X	-0.7501	-0.7500	0.0010	-0.0010	-0.0001	-|
37	3_D7(2)	X	-1.5001	-1.5000	0.0010	-0.0010	-0.0001	-|

Measurement Plan D4500 rev PB2 Date May 22, 2013 3

Part Number D4500-1 P Serial # 001 Time 1:36:45 pm

Wejay

Feature		ID	Actual	Nominal	pos Tol	neg Tol	Diff	<--|-->
37	3_D7(3)	X	-2.2501	-2.2500	0.0010	-0.0010	-0.0001	-|
37	3_D7(4)	X	-3.0000	-3.0000	0.0010	-0.0010	0.0000	-|
37	3_D7(5)	X	-3.7500	-3.7500	0.0010	-0.0010	0.0000	-|
37	3_D7(6)	X	-4.5000	-4.5000	0.0010	-0.0010	0.0000	|-
37	3_D7(7)	X	-5.2499	-5.2500	0.0010	-0.0010	0.0001	|-
37	3_D7(8)	X	-5.9999	-6.0000	0.0010	-0.0010	0.0001	|-
37	3_D7(9)	X	-6.7499	-6.7500	0.0010	-0.0010	0.0001	|-
36b	3_B1(1)	Y	-0.3091	-0.3100	0.0300	-0.0300	0.0009	|-
36b	3_B1(2)	Y	-0.3097	-0.3105	0.0300	-0.0300	0.0009	|-
36b	3_B1(3)	Y	-0.3102	-0.3111	0.0300	-0.0300	0.0009	|-
36b	3_B1(4)	Y	-0.3107	-0.3116	0.0300	-0.0300	0.0010	|-
36b	3_B1(5)	Y	-0.3110	-0.3122	0.0300	-0.0300	0.0012	|-
36b	3_B1(6)	Y	-0.3114	-0.3127	0.0300	-0.0300	0.0013	|-
36b	3_B1(7)	Y	-0.3120	-0.3133	0.0300	-0.0300	0.0013	|-
36b	3_B1(8)	Y	-0.3124	-0.3138	0.0300	-0.0300	0.0014	|-
36b	3_B1(9)	Y	-0.3129	-0.3144	0.0300	-0.0300	0.0015	|-
31e	3_C8	D	0.1286	0.1290	0.0050	-0.0010	-0.0004	---|
38	3_C5	X	-0.4989	-0.4990	0.0100	-0.0100	0.0001	|-
36c	3_B1	Y	-0.3140	-0.3100	0.0300	-0.0300	-0.0040	-|
31f	3_C8(1)	D	0.1285	0.1290	0.0050	-0.0010	-0.0005	---|
31f	3_C8(2)	D	0.1286	0.1290	0.0050	-0.0010	-0.0004	---|
31f	3_C8(3)	D	0.1286	0.1290	0.0050	-0.0010	-0.0004	---|
31f	3_C8(4)	D	0.1286	0.1290	0.0050	-0.0010	-0.0004	---|
31f	3_C8(5)	D	0.1286	0.1290	0.0050	-0.0010	-0.0004	---|
31f	3_C8(6)	D	0.1285	0.1290	0.0050	-0.0010	-0.0005	---|
31f	3_C8(7)	D	0.1286	0.1290	0.0050	-0.0010	-0.0004	---|
31f	3_C8(8)	D	0.1286	0.1290	0.0050	-0.0010	-0.0004	---|
31f	3_C8(9)	D	0.1286	0.1290	0.0050	-0.0010	-0.0004	---|
31f	3_C8(10)	D	0.1286	0.1290	0.0050	-0.0010	-0.0004	---|
31f	3_C8(11)	D	0.1286	0.1290	0.0050	-0.0010	-0.0004	---|
31f	3_C8(12)	D	0.1286	0.1290	0.0050	-0.0010	-0.0004	---|
31f	3_C8(13)	D	0.1285	0.1290	0.0050	-0.0010	-0.0005	---|
31f	3_C8(14)	D	0.1286	0.1290	0.0050	-0.0010	-0.0004	---|
31f	3_C8(15)	D	0.1286	0.1290	0.0050	-0.0010	-0.0004	---|
31f	3_C8(16)	D	0.1287	0.1290	0.0050	-0.0010	-0.0003	---|
36d	3_B1(1)	Y	-0.3127	-0.3150	0.0300	-0.0300	0.0023	|-
36d	3_B1(2)	Y	-0.3126	-0.3155	0.0300	-0.0300	0.0029	|-
36d	3_B1(3)	Y	-0.3125	-0.3160	0.0300	-0.0300	0.0035	|-
36d	3_B1(4)	Y	-0.3124	-0.3164	0.0300	-0.0300	0.0040	|-
36d	3_B1(5)	Y	-0.3124	-0.3169	0.0300	-0.0300	0.0045	|-
36d	3_B1(6)	Y	-0.3123	-0.3174	0.0300	-0.0300	0.0050	|-
36d	3_B1(7)	Y	-0.3122	-0.3179	0.0300	-0.0300	0.0056	|-
36d	3_B1(8)	Y	-0.3121	-0.3183	0.0300	-0.0300	0.0062	|-
36d	3_B1(9)	Y	-0.3121	-0.3188	0.0300	-0.0300	0.0067	|-
36d	3_B1(10)	Y	-0.3121	-0.3193	0.0300	-0.0300	0.0072	|-

Measurement Plan D4500 rev PB2 Date May 22, 2013 4

Part Number D4500-1 P Serial # 001 Time 1:36:45 pm

Wejay

Feature		ID	Actual	Nominal	pos Tol	neg Tol	Diff	<--|-->
36d	3_B1(11)	Y	-0.3120	-0.3198	0.0300	-0.0300	0.0078	|--
36d	3_B1(12)	Y	-0.3120	-0.3202	0.0300	-0.0300	0.0083	|--
36d	3_B1(13)	Y	-0.3120	-0.3207	0.0300	-0.0300	0.0087	|--
36d	3_B1(14)	Y	-0.3119	-0.3212	0.0300	-0.0300	0.0093	|--
36d	3_B1(15)	Y	-0.3117	-0.3217	0.0300	-0.0300	0.0100	|--
36d	3_B1(16)	Y	-0.3116	-0.3221	0.0300	-0.0300	0.0105	|--
39	3_C5(1)	X	-0.7609	-0.7600	0.0100	-0.0100	-0.0009	-|
39	3_C5(2)	X	-1.5210	-1.5200	0.0100	-0.0100	-0.0010	-|
39	3_C5(3)	X	-2.2810	-2.2800	0.0100	-0.0100	-0.0010	-|
39	3_C5(4)	X	-3.0409	-3.0400	0.0100	-0.0100	-0.0009	-|
39	3_C5(5)	X	-3.8010	-3.8000	0.0100	-0.0100	-0.0010	-|
39	3_C5(6)	X	-4.5610	-4.5600	0.0100	-0.0100	-0.0010	-|
39	3_C5(7)	X	-5.3209	-5.3200	0.0100	-0.0100	-0.0009	-|
39	3_C5(8)	X	-6.0810	-6.0800	0.0100	-0.0100	-0.0010	-|
39	3_C5(9)	X	-6.8410	-6.8400	0.0100	-0.0100	-0.0010	-|
39	3_C5(10)	X	-7.6009	-7.6000	0.0100	-0.0100	-0.0009	-|
39	3_C5(11)	X	-8.3609	-8.3600	0.0100	-0.0100	-0.0009	-|
39	3_C5(12)	X	-9.1209	-9.1200	0.0100	-0.0100	-0.0009	-|
39	3_C5(13)	X	-9.8808	-9.8800	0.0100	-0.0100	-0.0008	-|
39	3_C5(14)	X	-10.6407	-10.6400	0.0100	-0.0100	-0.0007	-|
39	3_C5(15)	X	-11.4006	-11.4000	0.0100	-0.0100	-0.0006	-|
39	3_C5(16)	X	-12.1606	-12.1600	0.0100	-0.0100	-0.0006	-|
31g	3_C8	D	0.1286	0.1290	0.0050	-0.0010	-0.0004	—|
36e	3_B1	X	0.3046	0.3100	0.0300	-0.0300	-0.0054	-|
40	3_B1	Y	0.3094	0.3100	0.0300	-0.0300	-0.0006	-|
31h	3_C8(1)	D	0.1286	0.1290	0.0050	-0.0010	-0.0004	—|
31h	3_C8(2)	D	0.1286	0.1290	0.0050	-0.0010	-0.0004	—|
31h	3_C8(3)	D	0.1286	0.1290	0.0050	-0.0010	-0.0004	—|
31h	3_C8(4)	D	0.1286	0.1290	0.0050	-0.0010	-0.0004	—|
31h	3_C8(5)	D	0.1286	0.1290	0.0050	-0.0010	-0.0004	—|
36f	3_C8(1)	X	0.3053	0.3100	0.0300	-0.0300	-0.0047	-|
36f	3_C8(2)	X	0.3062	0.3100	0.0300	-0.0300	-0.0038	-|
36f	3_C8(3)	X	0.3067	0.3100	0.0300	-0.0300	-0.0033	-|
36f	3_C8(4)	X	0.3074	0.3100	0.0300	-0.0300	-0.0026	-|
36f	3_C8(5)	X	0.3078	0.3100	0.0300	-0.0300	-0.0022	-|
41	3_B1(1)	Y	0.7505	0.7500	0.0100	-0.0100	0.0005	|-
41	3_B1(2)	Y	1.5005	1.5000	0.0100	-0.0100	0.0005	|-
41	3_B1(3)	Y	2.2507	2.2500	0.0100	-0.0100	0.0007	|-
41	3_B1(4)	Y	3.0009	3.0000	0.0100	-0.0100	0.0009	|-
41	3_B1(5)	Y	3.7510	3.7500	0.0100	-0.0100	0.0010	|-
31i	3_C8	D	0.1286	0.1290	0.0100	-0.0100	-0.0004	-|
36g	3_B1	X	0.3138	0.3100	0.0300	-0.0300	0.0038	|-
42	3_C1	Y	0.7410	0.7420	0.0100	-0.0100	-0.0010	-|
31j	3_C8	D	0.1291	0.1290	0.0100	-0.0100	0.0001	|-
36h	3_B1	X	0.3138	0.3100	0.0300	-0.0300	0.0038	|-

Measurement Plan D4500 rev PB2 Date May 22, 2013 5

Part Number D4500-1 P Serial # 001 Time 1:36:45 pm

Wejay

Feature		ID	Actual	Nominal	pos Tol	neg Tol	Diff	<--|-->
43a	3_C1	Y	0.6253	0.6250	0.0100	-0.0100	0.0003	|-
31k	3_C8	D	0.1291	0.1290	0.0100	-0.0100	0.0001	|-
36i	3_B1	X	0.3130	0.3100	0.0300	-0.0300	0.0030	|-
43b	3_C1	Y	0.6246	0.6250	0.0100	-0.0100	-0.0004	-|
31L	3_C8	D	0.1287	0.1290	0.0050	-0.0010	-0.0003	---|
44a	3_B7	X	0.3170	0.3100	0.0300	-0.0300	0.0070	|-
45	3_B6	Y	0.3779	0.3800	0.0300	-0.0300	-0.0021	-|
31m	3_C8	D	0.1286	0.1290	0.0050	-0.0010	-0.0004	---|
46	3_B6	Y	2.0985	2.1000	0.0300	-0.0300	-0.0015	-|
44b	3_B7_R	Dist	0.3156	0.3100	0.0300	-0.0300	0.0056	|-
31n	3_C8	D	0.1286	0.1290	0.0050	-0.0010	-0.0004	---|
47	3_B6	Y	2.8610	2.8600	0.0300	-0.0300	0.0010	|-
44c	3_B7_R	Dist	0.3155	0.3100	0.0300	-0.0300	0.0055	|-
31o	3_C8	D	0.1286	0.1290	0.0050	-0.0010	-0.0004	---|
48	3_B6	Y	4.3427	4.3400	0.0300	-0.0300	0.0027	|-
44d	3_B7_R	Dist	0.3138	0.3100	0.0300	-0.0300	0.0038	|-
31p	3_C8	D	0.1285	0.1290	0.0050	-0.0010	-0.0005	---|
49	3_B6	X	-3.5650	-3.5700	0.0300	-0.0300	0.0050	|-
44f	3_B7	Y	0.3116	0.3100	0.0300	-0.0300	0.0016	|-
31q	3_C8	D	0.1286	0.1290	0.0050	-0.0010	-0.0004	---|
50	3_B6	X	-4.0024	-4.0000	0.0300	-0.0300	-0.0024	-|
44g	3_B7	Y	0.3089	0.3100	0.0300	-0.0300	-0.0011	-|
31r	3_C8(1)	D	0.1285	0.1290	0.0050	-0.0010	-0.0005	---|
31r	3_C8(2)	D	0.1285	0.1290	0.0050	-0.0010	-0.0005	---|
51a	3_C5(1)	X	-1.0001	-1.0000	0.0300	-0.0300	-0.0001	-|
51a	3_C5(2)	X	-2.0002	-2.0000	0.0300	-0.0300	-0.0002	-|
44h	3_B7(1)	Y	0.3091	0.3100	0.0300	-0.0300	-0.0009	-|
44h	3_B7(2)	Y	0.3093	0.3100	0.0300	-0.0300	-0.0007	-|
31rr	3_C8	D	0.1286	0.1290	0.0050	-0.0010	-0.0004	---|
52	3_C5_X	Dist	1.9995	2.0000	0.0100	-0.0100	-0.0005	-|
44hh	3_B7	Y	0.3095	0.3100	0.0300	-0.0300	-0.0005	-|
31s	3_C8(1)	D	0.1285	0.1290	0.0050	-0.0010	-0.0005	---|
31s	3_C8(2)	D	0.1285	0.1290	0.0050	-0.0010	-0.0005	---|
31s	3_C8(3)	D	0.1286	0.1290	0.0050	-0.0010	-0.0004	---|
53	3_B5	X	-12.9294	-12.9300	0.0300	-0.0300	0.0006	|-
51b	3_C5(1)	X	-1.0002	-1.0000	0.0300	-0.0300	-0.0002	-|
51b	3_C5(2)	X	-2.0003	-2.0000	0.0300	-0.0300	-0.0003	-|
51b	3_C5(3)	X	-3.0003	-3.0000	0.0300	-0.0300	-0.0003	-|
44i	3_B7(1)	Y	0.3095	0.3100	0.0300	-0.0300	-0.0005	-|
44i	3_B7(2)	Y	0.3097	0.3100	0.0300	-0.0300	-0.0003	-|
44i	3_B7(3)	Y	0.3097	0.3100	0.0300	-0.0300	-0.0003	-|
31t	3_C8	D	0.1286	0.1290	0.0300	-0.0300	-0.0004	-|
44j	3_B7	CartDist	0.3073	0.3100	0.0300	-0.0300	-0.0027	-|
31u	3_C9(1)	D	0.1286	0.1290	0.0050	-0.0010	-0.0004	---|
31u	3_C9(2)	D	0.1286	0.1290	0.0050	-0.0010	-0.0004	---|

Measurement Plan D4500 rev PB2 Date May 22, 2013 6

Part Number D4500-1 P Serial # 001 Time 1:36:45 pm

Wejay

Feature		ID	Actual	Nominal	pos Tol	neg Tol	Diff	<--|-->
31u	3_C9(3)	D	0.1286	0.1290	0.0050	-0.0010	-0.0004	----|
31u	3_C9(4)	D	0.1286	0.1290	0.0050	-0.0010	-0.0004	----|
31u	3_C9(5)	D	0.1286	0.1290	0.0050	-0.0010	-0.0004	----|
54	3_C3(1)	X	-0.8750	-0.8750	0.0300	-0.0300	0.0000	|
54	3_C3(2)	X	-1.7502	-1.7500	0.0300	-0.0300	-0.0002	-|
54	3_C3(3)	X	-2.6253	-2.6250	0.0300	-0.0300	-0.0003	-|
54	3_C3(4)	X	-3.5004	-3.5000	0.0300	-0.0300	-0.0004	-|
54	3_C3(5)	X	-4.3755	-4.3750	0.0300	-0.0300	-0.0005	-|
44k	3_B7(1)	Y	0.3082	0.3100	0.0300	-0.0300	-0.0018	-|
44k	3_B7(2)	Y	0.3083	0.3100	0.0300	-0.0300	-0.0017	-|
44k	3_B7(3)	Y	0.3082	0.3100	0.0300	-0.0300	-0.0018	-|
44k	3_B7(4)	Y	0.3081	0.3100	0.0300	-0.0300	-0.0019	-|
44k	3_B7(5)	Y	0.3082	0.3100	0.0300	-0.0300	-0.0018	-|
31v	3_C8	D	0.1286	0.1290	0.0050	-0.0010	-0.0004	----|
44m	3_B7	X	0.3093	-0.3100	0.0300	-0.0300	0.0007	|-
55	3_B2	Y	0.4992	0.5000	0.0050	-0.0010	-0.0008	----|
56a	4_A6	D	0.2037	0.2010	0.0050	-0.0010	0.0027	|-
57	4_C3	Y	1.1286	1.1300	0.0300	-0.0300	-0.0014	-|
58a	4_B3	X	0.3133	0.3100	0.0300	-0.0300	0.0033	|-
59a1	4_A5	D	0.0980	0.0980	0.0040	-0.0010	0.0000	---|
60a	4_A5	Y	-0.3448	-0.3440	0.0100	-0.0100	-0.0008	-|
59a2	4_A5	D	0.0980	0.0980	0.0040	-0.0010	0.0000	---|
61a	4_A5_Y	Dist	0.6875	0.6880	0.0100	-0.0100	-0.0005	-|
56b	4_A6	D	0.2034	0.2010	0.0050	-0.0010	0.0024	|-
58b1	4_B3_3d	Dist	0.3040	0.3100	0.0300	-0.0300	-0.0060	-|
58b2	4_B3_3d	Dist	0.3029	0.3100	0.0300	-0.0300	-0.0071	-|
62	4_C3	Y	3.7121	3.7100	0.0300	-0.0300	0.0021	|-
59b1	4_A5	D	0.0980	0.0980	0.0040	-0.0010	0.0000	---|
60b	4_A5	Y	-0.3474	-0.3440	0.0100	-0.0100	-0.0034	--|
59b2	4_A5	D	0.0980	0.0980	0.0040	-0.0010	0.0000	---|
61b	4_A5_R	Dist	0.6878	0.6880	0.0100	-0.0100	-0.0002	-|
56c	4_A6	D	0.2043	0.2010	0.0050	-0.0010	0.0033	|--
58c	4_B3	Y	0.3128	0.3100	0.0300	-0.0300	0.0028	|-
63	4_B3	X	-2.7527	-2.7500	0.0300	-0.0300	-0.0027	-|
59c1	4_A5	D	0.0980	0.0980	0.0040	-0.0010	0.0000	---|
60c	4_A5	X	-0.3397	-0.3440	0.0100	-0.0100	0.0043	|--
59c2	4_A5	D	0.0980	0.0980	0.0040	-0.0010	0.0000	---|
61c	4_A5_X	Dist	0.6878	0.6880	0.0100	-0.0100	-0.0002	-|
56d	4_A6	D	0.2037	0.2010	0.0050	-0.0010	0.0027	|-
58d	4_B3	Y	0.3099	0.3100	0.0300	-0.0300	-0.0001	-|
64	4_B3	X	-7.0059	-7.0000	0.0100	-0.0100	-0.0059	---|
59d1	4_A5	D	0.0980	0.0980	0.0040	-0.0010	0.0000	---|
60d	4_A5	X	-0.3407	-0.3440	0.0100	-0.0100	0.0033	|--
59d2	4_A5	D	0.0981	0.0980	0.0040	-0.0010	0.0001	---|
61d	4_A5_Y	Dist	0.6881	0.6880	0.0100	-0.0100	0.0001	|-

Measurement Plan D4500 rev PB2 | Date May 22, 2013 | 7

Part Number D4500-1 P | Serial # 001 | Time 1:36:45 pm

Wejay

Feature		ID	Actual	Nominal	pos Tol	neg Tol	Diff	<--|-->
56e	4_A6	D	0.2038	0.2010	0.0050	-0.0010	0.0028	|--
58e	4_B3	Y	0.3103	0.3100	0.0300	-0.0300	0.0003	|-
65	4_B4	X	-12.0062	-12.0000	0.0100	-0.0100	-0.0062	---|
59e1	4_A5	D	0.0980	0.0980	0.0040	-0.0010	0.0000	---|
60e	4_A5	X	-0.3405	-0.3440	0.0100	-0.0100	0.0035	|--
59e2	4_A5	D	0.0980	0.0980	0.0040	-0.0010	0.0000	---|
61e	4_A5_X	Dist	0.6878	0.6880	0.0100	-0.0100	-0.0002	-|
56f	4_A6	D	0.2043	0.2010	0.0050	-0.0010	0.0033	|--
66	4_B5	X	-17.0969	-17.0900	0.0100	-0.0100	-0.0069	---|
67	4_B3	Y	1.3270	1.3100	0.0300	-0.0300	0.0170	|---
59f1	4_A5	D	0.0979	0.0980	0.0040	-0.0010	-0.0001	---|
60f	4_A7	X	-0.3418	-0.3440	0.0100	-0.0100	0.0022	|-
59f2	4_A5	D	0.0980	0.0980	0.0040	-0.0010	0.0000	---|
61f	4_A5_R	Dist	0.6880	0.6880	0.0100	-0.0100	0.0000	|-

Manually Inspected Dims

67	2_B6	.125 typ. wall thickness	.1225/.1255
68	2_A5	.125 typ. flange thk	.123/.134
69	2_B2	R.06	R.06 TYP.
70	2_B2	R.16	R.16 TYP.
71	2_D6	2.87 dim	2.869
72	2_C7	1.85 dim	1.845
73	2_C7	1.14 dim	1.135
74	2_C6	135 deg angle	135°
75	2_D4	18.62 dim	18.622
76	2_D1	1.43 dim	1.425
77	2_C1	0.83 dim	.825
78	2_C2	143 deg angle	143°
79	2_D2	R0.12 typ	R.125 TYP.
80	3_C8	CSK .220 dia x 100 deg	.218/.220 x 100°
81	3_D1	CSK .220 dia x 100 deg	.218/.220 x 100°
82	3_A5	0.062 dim typ.	.062/.066
83	3_A5	R0.063 typ.	.063 TYP.
84	4_C4	CSK .170 dia x 100 deg	.170/.172 x 100°
85	4_A5	CSK .120 dia x 100 deg	.120/.125 x 100°
86	1_A8	Break sharp edges .005-.010max	O.K.

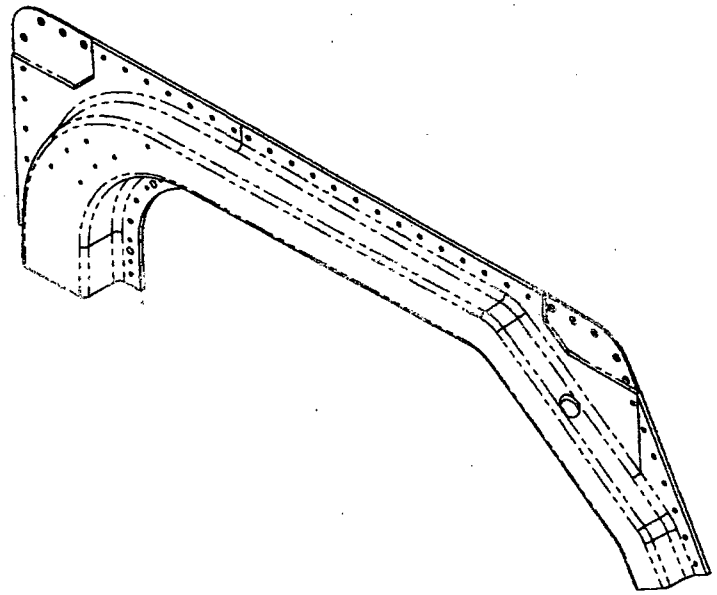

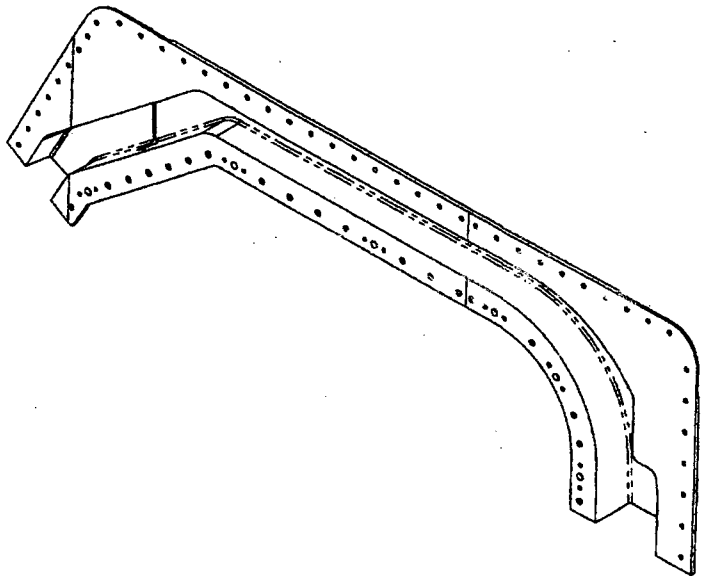

D4500-1 BELL DOOR HEADER (LH)

RELEASED
2013 -01- 10

NOTES:
1) MATERIAL: 6061-T6/T651/T6510/T6511/T62 ALUMINUM BAR
PER QQ-A-225/8 OR AMS-QQ-A-225/8
(OR AMS 4117/4128/4115/4116)
OR QQ-A-200/8 OR AMS-QQ-A-200/8 (OR AMS 4160)
OR ASTM B211 OR ASTM B221
REF DART SPEC M6061T6B
2) FINISH: CHEMICAL CONVERSION COAT PER DART QSI 005 4.1
PRIME TEMPO GREY (4.2.1.3.2) PER DART QSI 005 4.2
3) TOLERANCES: PER DART QSI 018 UNLESS OTHERWISE NOTED
4) UNITS: INCHES UNLESS OTHERWISE NOTED
5) BREAK SHARP EDGES: 0.005 TO 0.010 MAX
6) IDENTIFICATION: N/A
7) WEIGHT: 1.78 lbs
8) RAW MATERIAL SURFACE FINISH SUFFICIENT FOR THIS PART
(NOT NECESSARY TO FACE MATERIAL).
9) ALL NON DIMENSIONED FEATURES PER CAD FILE "D4500-1-REVD.STP"

REV.	DESCRIPTION	BY	DATE
D	SEE SHT 2 ZONE C8 POCKET ADDED TO AFT AREA OF FLANGE SIMILAR TO THE POCKET ON THE FWD AREA OF THE FLANGE. DONE TO FACILITATE OPERATION OF DOOR MECHANISM SAME POCKET ADDED TO -2 PART.	AJS	12.12.03
C	ADDED -2 (RH CONFIGURATION). B8-3 0.38 DIM TYP OUTSIDE PATTERN NOTE DELETED (DRAFTING ERROR). C4-4 Ø0.129 THRU WAS Ø0.225 (DRAFTING ERROR) CSK WAS 0.170. SEE DETAIL C Ø0.201 HOLE WAS Ø0.194 (EXPANDED FOR FLOATING NUTPLATE).	AJS	12.10.10
B	COMPLETE REDESIGN.	AJS	12.09.11
A	NEW ISSUE	AJS	12.03.02

DESIGN	AJS	DART AEROSPACE LTD HAWKESBURY, ONTARIO, CANADA	
DRAWN	AJS		
CHECKED	AP	DRAWING NO. D4500	REV. D SHEET 1 OF 8
MFG. APPR.			
APPROVED		TITLE BELL DOOR HEADER	SCALE - NTS
DE APPR.			
DATE	12.12.03		

COPYRIGHT © 2012 BY DART AEROSPACE LTD
THIS DOCUMENT IS FROM HIGHLY CONFIDENTIAL AND IS SUPPLIED ON THE EXPRESS CONDITION THAT IT IS NOT TO BE USED FOR ANY PURPOSE OR OWNED OR COMMUNICATED TO ANY OTHER PERSON WITHOUT WRITTEN PERMISSION FROM DART AEROSPACE LTD.

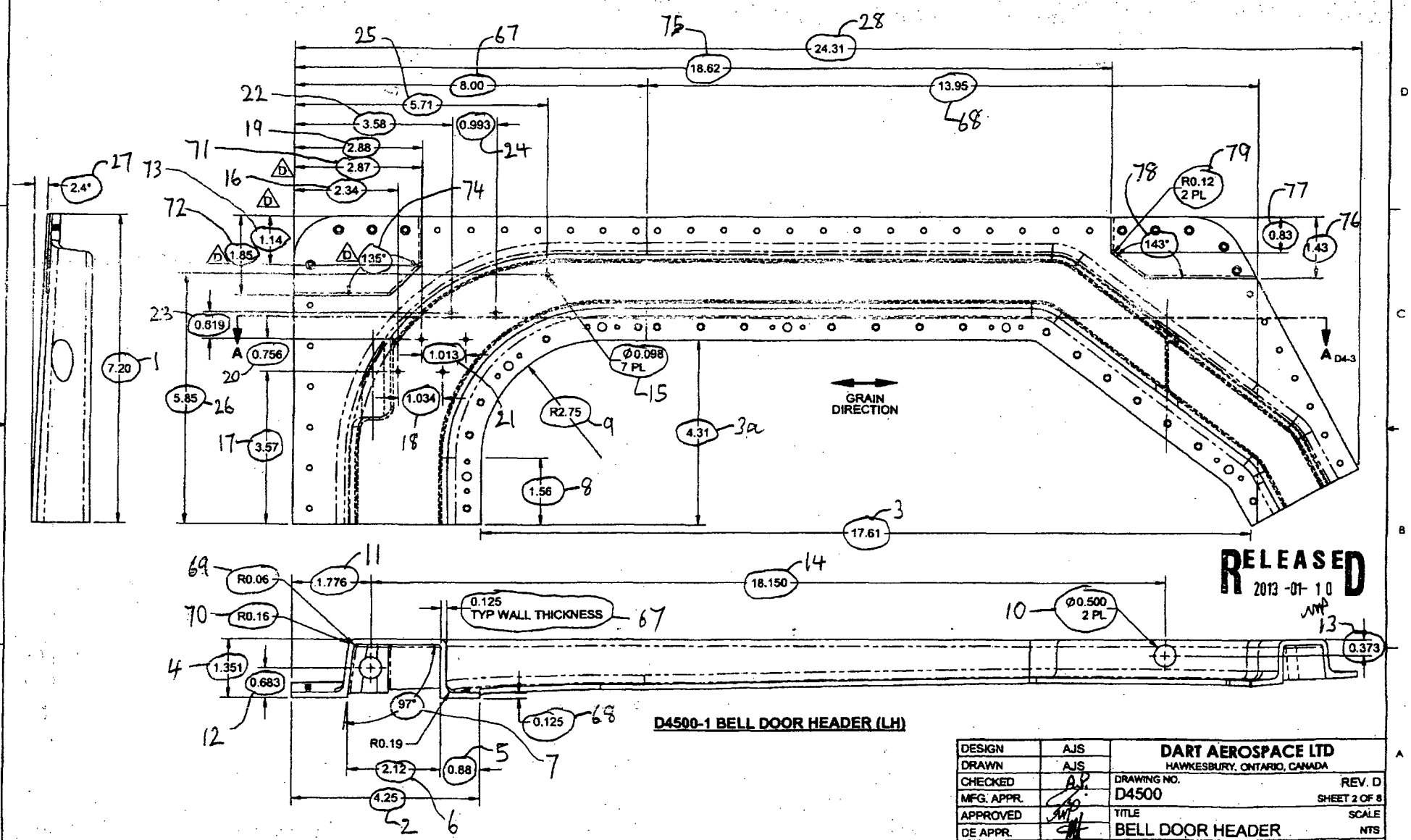

D4500-1 BELL DOOR HEADER (LH)

DESIGN	AJS	DART AEROSPACE LTD HAWKESBURY, ONTARIO, CANADA
DRAWN	AJS	
CHECKED		DRAWING NO. D4500 — REV. D — SHEET 2 OF 8
MFG. APPR.		
APPROVED		TITLE: BELL DOOR HEADER — SCALE: NTS
DE APPR.		
DATE	12.12.03	

COPYRIGHT © 2013 BY DART AEROSPACE LTD

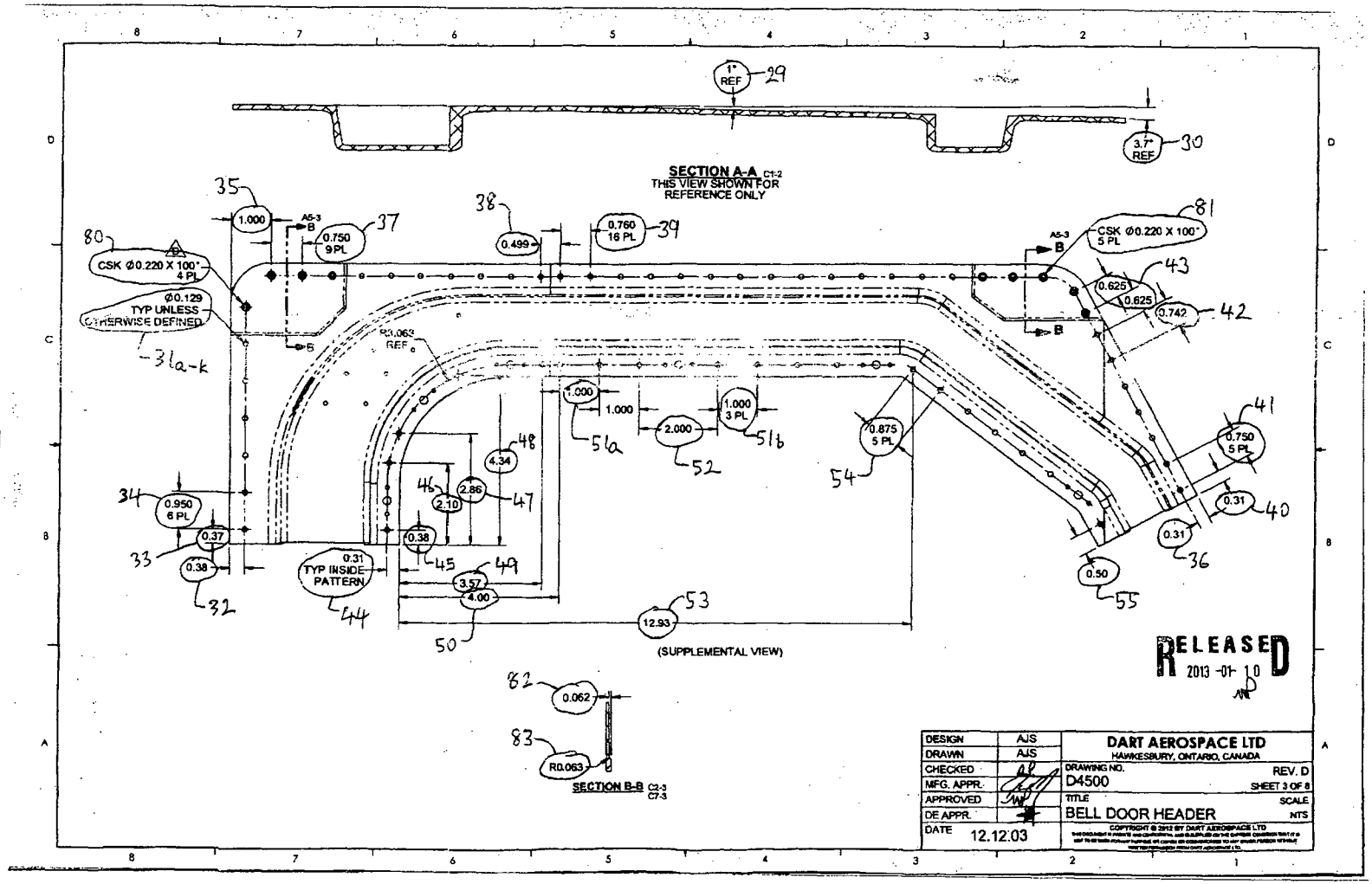

DESIGN	AJS	DART AEROSPACE LTD HAWKESBURY, ONTARIO, CANADA
DRAWN	AJS	
CHECKED		DRAWING NO. D4500 REV. D
MFG. APPR.		SHEET 3 OF 8
APPROVED		TITLE BELL DOOR HEADER SCALE NTS
DE APPR.		
DATE	12.12.03	

COPYRIGHT © 2012 BY DART AEROSPACE LTD

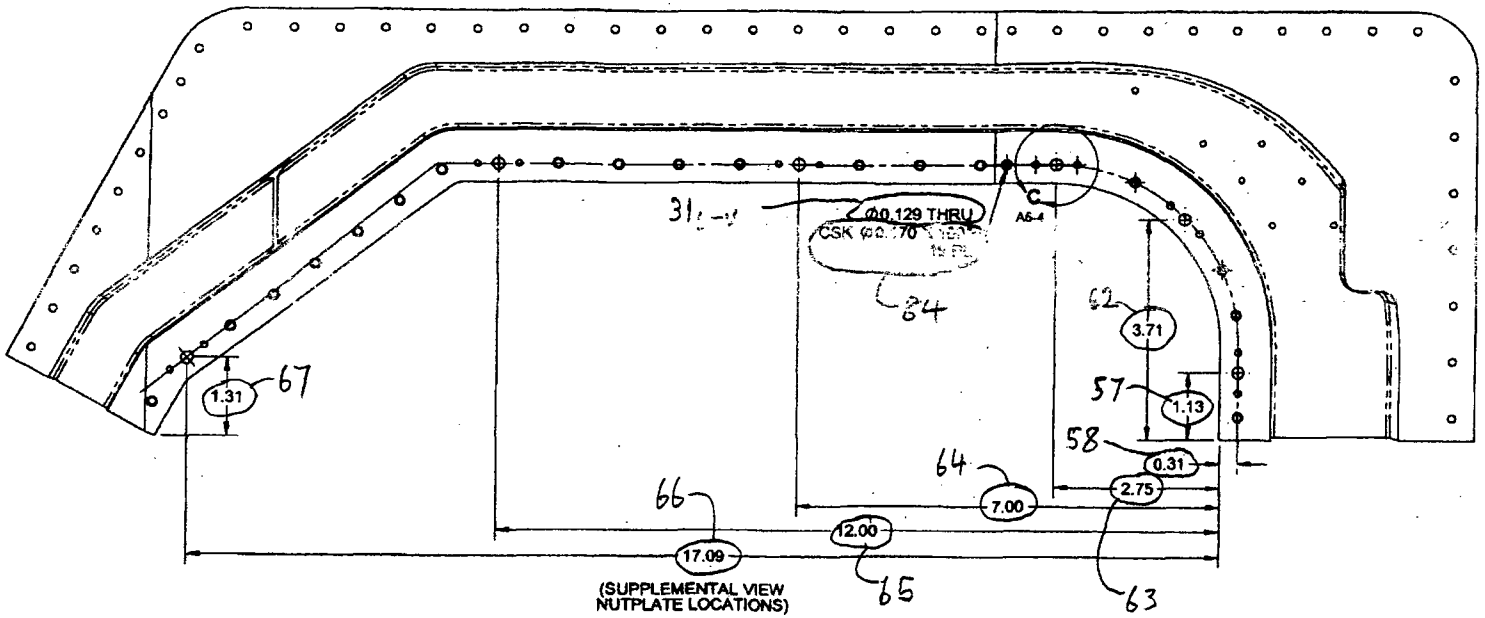

(SUPPLEMENTAL VIEW
NUTPLATE LOCATIONS)

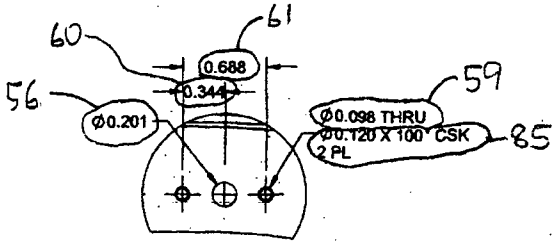

DETAIL C C3-4
NUTPLATE HOLE DETAIL 6 PL
SCALE 2X

RELEASED
2013 -01- 10

DESIGN	AJS	**DART AEROSPACE LTD** HAWKESBURY, ONTARIO, CANADA
DRAWN	AJS	
CHECKED	AL	DRAWING NO. D4500 — REV. D — SHEET 4 OF 8
MFG. APPR.		
APPROVED		TITLE: BELL DOOR HEADER — SCALE: NTS
DE APPR.		
DATE	12.12.03	

COPYRIGHT © 2012 BY DART AEROSPACE LTD
THIS DOCUMENT & PRINTS ARE CONFIDENTIAL AND SUPPLIED ON THE EXPRESS CONDITION THAT IT IS NOT TO BE USED FOR ANY PURPOSE OR COPIED OR COMMUNICATED TO ANY OTHER PERSON WITHOUT WRITTEN PERMISSION FROM DART AEROSPACE LTD.